EXPORT

TVS

TVS Apache RTR 160

PARTS CATALOGUE

TVS MOTOR COMPANY

NOTICE

The description and illustrations in this booklet are not to be taken as binding on the manufacturers. the essential features of the type described and illustrated herein remains unaltered, TVS MOTOR COMPANY LIMITED, reserves the right to carry out any moment, without being obliged to bring this booklet up-date modifications, on the vehicle, parts or accessories, as may be convenient and necessary.

TVS

FOREWORD

We have pleasure in presenting the spare parts catalogue for TVS APACHE RTR 160.

The catalogue has been specifically designed to assist you in selecting the correct parts to maintain the vehicle in the best possible condition.

TVS MOTOR COMPANY, Genuine Parts have been subjected to stringent standards of quality control to ensure long life of the vehicle. It is therefore necessary that only TVS Genuine Parts are used. In continuous efforts to improve the performance and efficiency of the vehicle, design specification, diagrams / illustrations and part numbers can change without notice. Consequently, the description in this spare parts catalogue cannot therefore be final and binding on us.

While ordering spare parts ensure that correct part numbers, parts description and quantity are clearly mentioned.

Please note that the drawings and the illustrations are for ready reference of spare parts numbers and description only. It is not designed to be used as an assembly or servicing reference manual. For servicing please use "TVS APACHE RTR 160 SERVICE MANUAL".

This parts catalogue is exclusively for "TVS MOTOR COMPANYs" Authorised Outlets.

In case of any assistance, please contact us.

TVS MOTOR COMPANY LIMITED
International Business

INDEX

FIG. No.	DESCRIPTION	PAGE No.
1	CYLINDER HEAD ASSY.	07
2	CYLINDER BLOCK & CRANKSHAFT ASSY.	09
3	CRANKCASE LH, RH & OIL PUMP ASSY.	10
4	CLUTCH &COVER CLUTCH ASSY.	12
5	MAGNETO & IGNITION COIL ASSY.	14
6	MUFFLER ASSEMBLY	15
7	CARBURETTOR ASSEMBLY	16
8	AIR CLEANER ASSEMBLY	18
9	KICK STARTER ASSEMBLY	19
10	TRANSMISSION ASSEMBLY	20
11	GEAR SHIFT MECHANISM ASSY.	22
12	FUEL TANK & FUEL COCK ASSY.	24
12A	FUEL TANK & FUEL COCK ASSY.	25
13	FRAME & SAREE GUARD ASSY.	26
13A	FRAME & SAREE GUARD ASSY.	29
14	CENTER STAND & FOOTREST ASSY.	32
15	SEAT ASSEMBLY	33
16	HANDLE BAR & CABLE ASSY.	34
17	HEAD LAMP ASSEMBLY	36

FIG. No.	DESCRIPTION	PAGE No.
17A	HEAD LAMP ASSEMBLY	38
18	PANNEL LH, RH & RR FENDER ASSY.	40
18A	PANNEL LH, RH & RR FENDER ASSY.	41
19	SPEEDOMETER ASSEMBLY	43
20	REAR LAMP ASSY.	44
21	WIRING HARNESS, TCI UNIT BATTERY ASSY.	45
22	FRONT FORK ASSEMBLY	46
23	FRONT WHEEL ASSEMBLY	48
24	REAR WHEEL ASSEMBLY	49
25	REAR WHEEL ASSEMBLY - DISC	51
26	SWING ARM ASSEMBLY	53
27	SHOCK ABSORBER & CHAINCASE ASSY.	54
28	SECONDARY AIR INJECTION ASSY.	55
29	DISC BRAKE ASSEMBLY	56
30	MASTER CYLINDER ASSY. REAR DISC BRAKE	58
31	TOOL KIT	59
	KIT & KIT CONTENT	60
	PAINTED PART NUMBER	66

RTR160

FIG.No.01

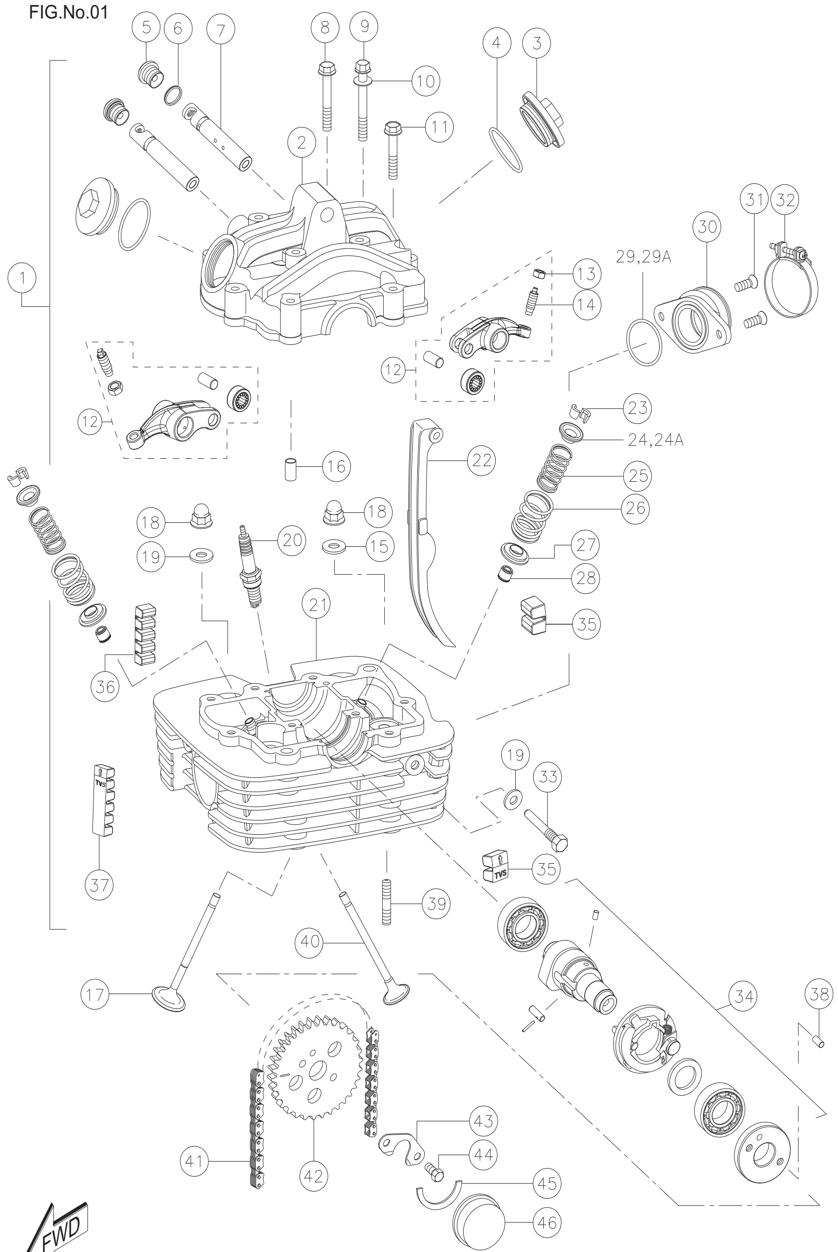

CYLINDER HEAD ASSEMBLY

FIG. NO. 01

CYLINDER HEAD ASSEMBLY

REF. NO.	PART NO.	DESCRIPTION	NO. OFF APACHE RTR 160	NO. OFF APACHE RTR 160 HYPER EDGE	NO. OFF APACHE RTR 160 HYPER EDGE REFRESH	REMARKS
1	M7321980	CYLINDER HEAD ASSEMBLY KIT	1	1	1	**
2	-----	COVER CYLINDER HEAD	1	1	1	
3	M1010380	CAP INSPECTION HOLE	2	2	-	
3A	R1011010	CAP INSPECTION HOLE	-	-	2	
4	M1010390	O-RING 29.5x3	2	2	2	
5	M1010540	PLUG ROCKER ARM SHAFT	2	2	2	
6	M1080520	GASKET - OIL DRAIN 13.8 x 4.8	2	2	2	
7	M7010850	SHAFT VALVE ROCKER ARM	2	2	2	
8	M1200600	HEX FLANGE BOLT M6x45	2	2	2	
9	M1200010	HEX FLANGE BOLT M6x55	4	4	4	
10	N2010960	GASKET CYLINDER HD COVER BOLT	4	4	4	
11	M1200590	HEX FLANGE BOLT M6x35	4	4	4	
12	R1011000	ARM VALVE ROCKER ASSY.	2	2	2	
13	S1010250	NUT TAPPET ADJUSTING	2	2	2	
14	S1010240	SCREW TAPPET ADJUSTING	2	2	2	
15	M1200060	PUNCHED WASHER 8.5x18x2.3	2	2	2	
16	M1010090	PIN CYLINDER HEAD COVER KNOCK	2	2	2	
17	M7010270	VALVE INTAKE	1	1	1	
18	M1200050	DOMED NUT WITH FLANGE M8	4	4	4	
19	M1010360	GASKET CYLINDER HEAD NUT	2	2	2	
20	M7011010	SPARK PLUG (UR5 DDC)	1	1	1	
21	M7321990	HEAD COMP. CYLINDER RTR	1	1	1	
22	M1080990	TENSIONER CAM CHAIN	1	1	1	
23	S1010320	COTTER VALVE	4	4	4	
24	N2011040	RETAINER VALVE SPRING	-	-	2	
24A	M1010590	RETAINER VALVE SPRING	2	2	-	

** - REFER KIT & KIT CONTENTS

FIG.No.01

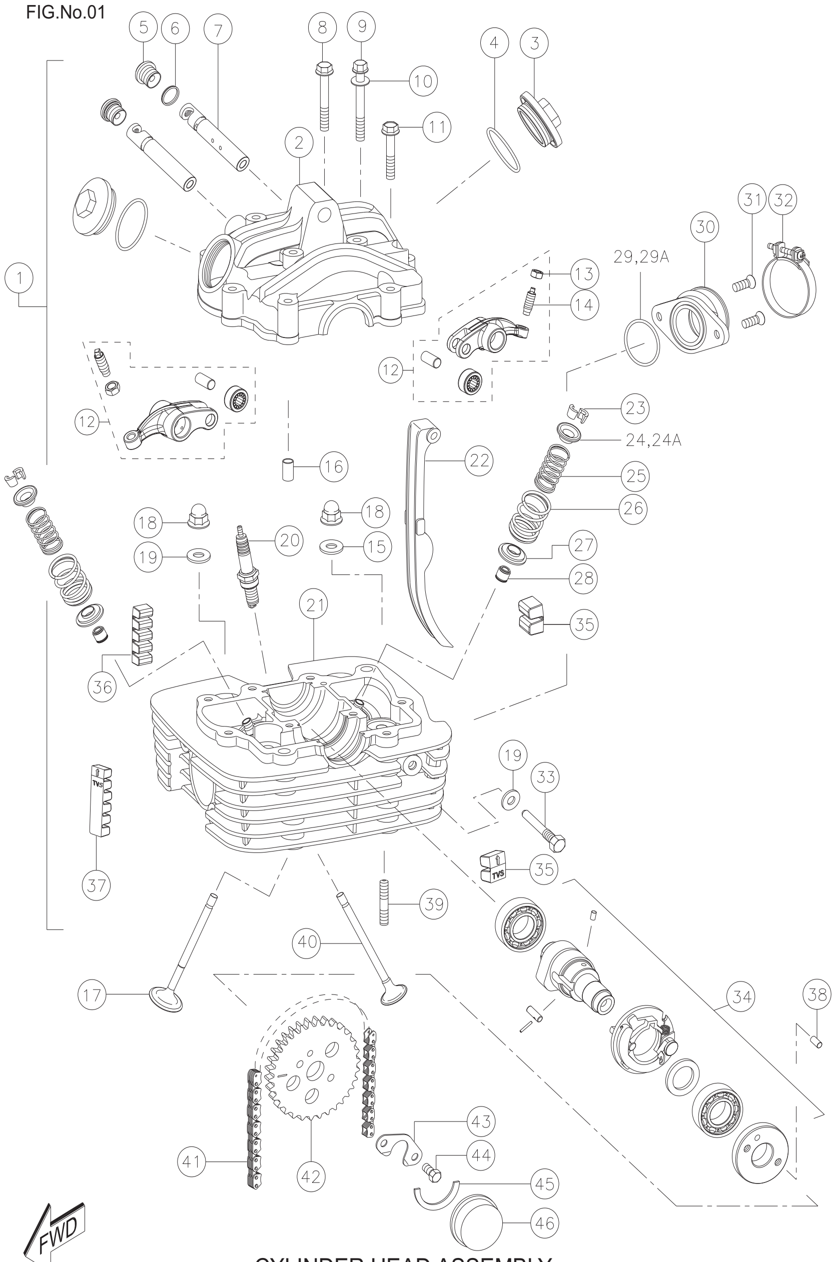

CYLINDER HEAD ASSEMBLY

FIG. NO. 01

CYLINDER HEAD ASSEMBLY

REF. NO.	PART NO.	DESCRIPTION	NO. OFF APACHE RTR 160			REMARKS
			RTR 160	RTR 160 HYPER EDGE	RTR 160 HYPER EDGE REFRESH	
25	N3011280	SPRING VALVE INNER	2	2	2	
26	M1010580	SPRING VALVE OUTER	2	2	2	
27	M1010610	SEAT VALVE SPRING	2	2	2	
28	M1010620	SEAL VALVE STEM OIL	2	2	-	
28A	N4011100	SEAL VALVE STEM OIL	-	-	2	
29	M1080640	O RING	1	1	-	
29A	M1200220	O RING 31.7x2.4	-	-	1	
30	M7040730	PIPE COMPLETE INTAKE	1	1	1	
31	0332228	CRR PAN HEAD SCREW	2	2	2	
32	M1040140	CLAMP INTAKE PIPE	1	1	1	
33	M1080510	BOLT CAM CHAIN TENSIONER	1	1	1	
34	M7010800	CAMSHAFT ASSY.	1	1	1	
35	M7011110	DAMPER CYLINDER HEAD 1	2	2	2	
36	M7011120	DAMPER CYLINDER HEAD 2	1	1	1	
37	M7011130	DAMPER CYLINDER HEAD 3	2	2	2	
38	M1010490	PIN SPROCKET KNOCK	1	1	1	
39	M1200780	STUD BOLT CYLINDER HEAD	4	4	4	
40	M7010280	VALVE EXHAUST	1	1	1	
41	M1010200	CAM CHAIN . CAMSHAFT DRIVE (LINK 94)	1	1	1	
42	M1010210	SPROCKET CAMSHAFT 32T	1	1	1	
43	M1080500	WASHER SPROCKET	1	1	1	
44	420452700	HEX SCREW M6x12	2	2	2	
45	M7010840	C - RING CAMSHAFT	1	1	1	
46	M7010910	PLUG CYLINDER HEAD	1	1	1	
47	M7322010	ENGINE VALVE KIT	1	1	1	**

** - REFER KIT & KIT CONTENTS

FIG.No.02

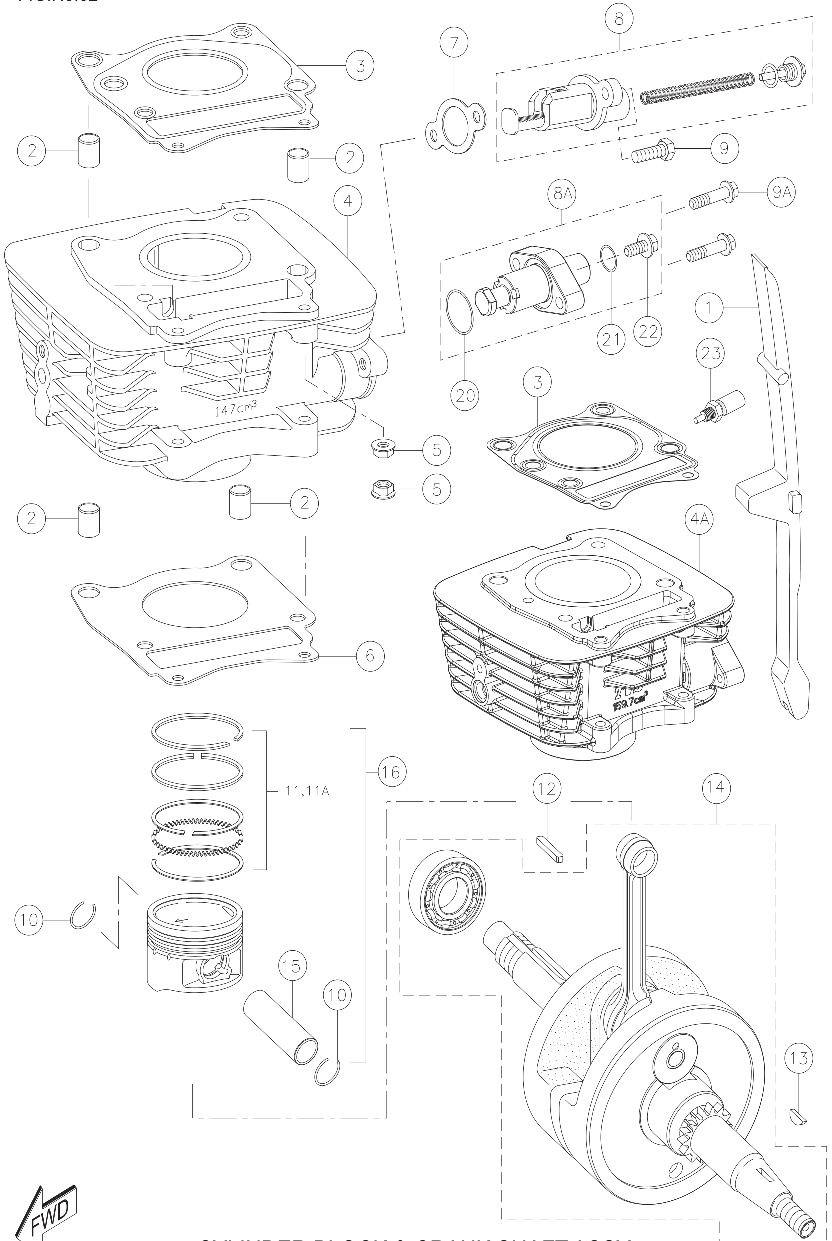

CYLINDER BLOCK & CRANK SHAFT ASSY.

FIG. NO. 02

CYLINDER BLOCK & CRANK SHAFT ASSY.

REF. NO.	PART NO.	DESCRIPTION	NO. OFF APACHE RTR 160	NO. OFF APACHE RTR 160 HYPER EDGE	NO. OFF APACHE RTR 160 HYPER EDGE REFRESH	REMARKS
1	M1010250	GUIDE CAM CHAIN	1	1	1	
2	S1200270	TUBULAR DOWEL	4	4	4	
3	M7010210	GASKET CYLINDER HEAD	1	1	-	
3A	M7011320	GASKET CYLINDER HEAD	-	-	1	
4	M70112607D	CYLINDER COMPLETE (160cc)	1	1	1	
5	M1200900	HEX FLANGE NUT M6	4	4	4	
6	M1010660	GASKET CYLINDER (BASE)	1	1	1	
7	M1010510	GASKET TENSIONER ADJUSTER	1	1	1	
8	R10105507D	ADJUSTER ASSY. TENSIONER	1	-	-	
8A	M7011370	ADJUSTER ASSY. TENSIONER	-	1	1	
9	420452700	HEX SCREW M6x20	2	-	-	
9A	N2200500	HEX FLANGE BOLT M6x25	-	2	2	
10	M1010440	CIRCLIP PISTON PIN	2	2	2	
11	M7322020	RING SET PISTON - STD RTR	1	1	1	**
11A	M7321960	RING SET PISTON - I O/S RTR	1	1	1**	
11B	M7321970	RING SET PISTON - II O/S RTR	1	1	1	**
12	N3080170	KEY 4x4x15 (RECTANGULAR)	1	1	1	
13	M1200760	WOODRUFF KEY (HALF ROUND TYPE)	1	1	1	
14	M7020270	CRANKSHAFT ASSEMBLY	1	1	1	
15	M7020370	PIN PISTON	1	1	1	
16	M7321630	PISTON KIT DIA 62 - STD	1	1	1	**
17	M7321640	PISTON KIT 62.5 - I O/S	1	1	1	**
18	M7321650	PISTON KIT DIA 63 - II O/S	1	1	1	**
19	M7322000	CYLINDER BLOCK & PISTON KIT	1	1	1	**
20	R1321190	O' RING ADJUSTER TENSIONER	1	1	1	
21	R1321210	O' RING CAP ADJUSTER	1	1	1	
22	R1321200	CAP ADJUSTER TENSIONER	1	1	1	
23	M71801807D	ENGINE ASSEMBLY ES	1	1	-	
23A	N9180470	ENGINE ASSEMBLY ES	-	-	1	

** REF KIT & KIT CONTENTS

FIG.No.03

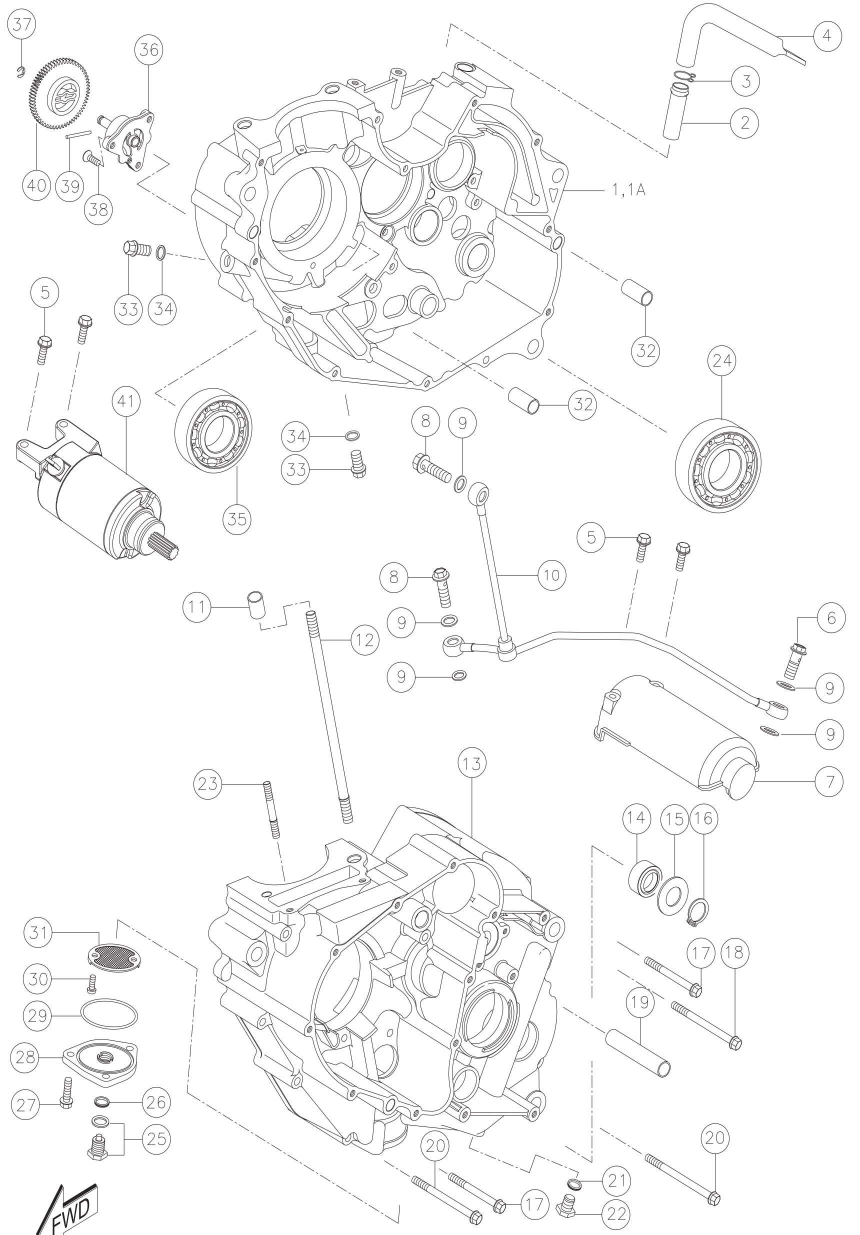

CRANKCASE LH, RH & OIL PUMP ASSY.

FIG. NO. 03

CRANKCASE LH, RH & OIL PUMP ASSY.

REF. NO.	PART NO.	DESCRIPTION	NO. OFF APACHE			REMARKS
			RTR 160	RTR 160 HYPER EDGE	RTR 160 HYPER EDGE REFRESH	
1	M7322050	CRANKCASE ASSY. RH	1	1	-	
1A	N9322780	CRANKCASE ASSY. RH	-	-	1	
2	M1080360	UNION BREATHER	1	1	1	
3	M1080650	CLAMP HOSE	1	1	1	
4	M1040740	TUBE BREATHER	1	1	1	
5	M1200510	HEX FLANGE BOLT M6x25	2	2	2	
6	M1081090	UNION BOLT OIL PIPE	1	1	1	
7	M1080340	COVER CRANKCASE	1	-	-	
8	M1080380	UNION BOLT OIL PIPE	2	2	2	
9	M1080370	GASKET OIL PIPE UNION	6	6	6	
10	M1010260	PIPE COMP. HEAD & T/M OIL	1	1	1	
11	0074010	DOWEL PIN	4	4	4	
12	M1010400	BOLT CYLINDER STUD L142	4	4	4	
13	M70300707D	CRANKCASE COMP. LH	1	1	1	
14	N2081720	OILSEAL	1	1	1	
15	M1200920	PUNCHED WASHER	1	1	1	
16	M1200870	CIRCLIP 12x1	1	1	1	
17	M1200430	HEX FLANGE BOLT M6x55	9	9	9	
18	M1200440	HEX FLANGE BOLT M6x75	3	3	3	
19	M1080430	PIN MAGNETO COVER	1	1	1	
20	M1200450	HEX FLANGE BOLT M6x95	1	1	1	
21	M1080420	GASKET TDC PLUG	1	1	1	
22	M1200080	HEX SCREW M12x10	1	1	1	

RTR160

FIG.No.03

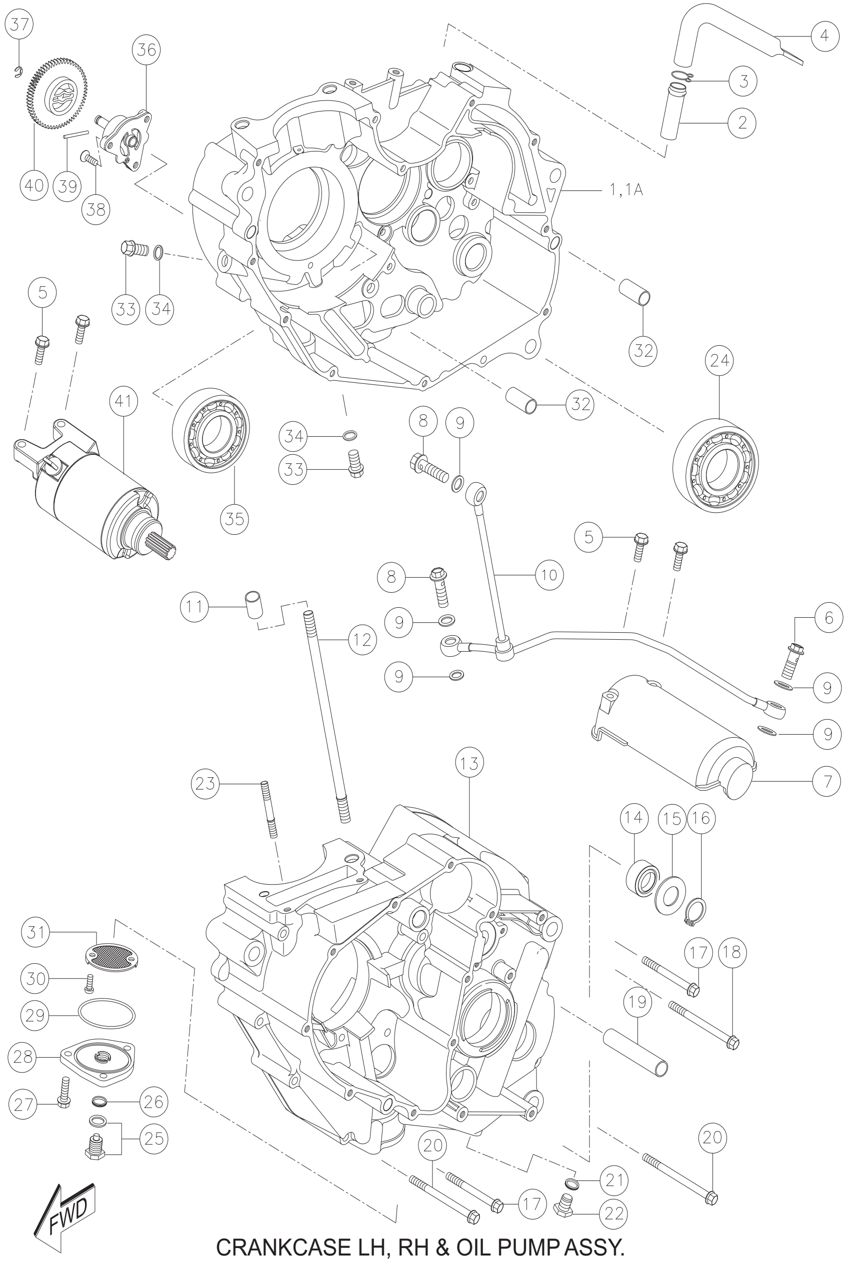

CRANKCASE LH, RH & OIL PUMP ASSY.

FIG. NO. 03

CRANKCASE LH, RH & OIL PUMP ASSY.

REF. NO.	PART NO.	DESCRIPTION	NO. OFF APACHE RTR 160	NO. OFF APACHE RTR 160 HYPER EDGE	NO. OFF APACHE RTR 160 HYPER EDGE REFRESH	REMARKS
23	M1200780	STUD BOLT CYLINDER HEAD	2	2	2	
24	M7200530	BALL BEARING 35x72x17	1	1	1	
25	M1080580	PLUG OIL DRAIN	1	1	1	
26	S1011290	SEALING WASHER	1	1	1	
27	M1200530	HEX FLANGE BOLT M6x20	3	3	3	
28	M1080570	CAP OIL STRAINER	1	1	1	
29	M1080610	O-RING 60.5x2.4	1	1	1	
30	420515000	CRR PAN HD SCREW M4x10	2	2	2	
31	M1080560	STRAINER COMP. ENGINE OIL	1	1	1	
32	M1030120	PIN CRANKCASE	2	2	2	
33	M1200070	HEX FLANGE BOLT M10x12	2	2	2	
34	N2081600	GASKET OIL GALLERY PLUG	2	2	2	
35	M1200140	BALL BEARING 28x68x18	1	1	1	
36	N9080240	PUMP ASSEMBLY OIL	1	1	1	
37	M1200730	CIRCLIP 6x0.8	1	1	1	
38	0332228	CRR CSK HEAD SCREW M6x20	3	3	3	
39	0064014 PIN	CLUTCH SPG	1	1	1	
40	M1080020	GEAR OIL PUMP DRIVEN	1	1	1	
41	M1060060	STARTER MOTOR ASSY.	1	1	1	

FIG.No.04

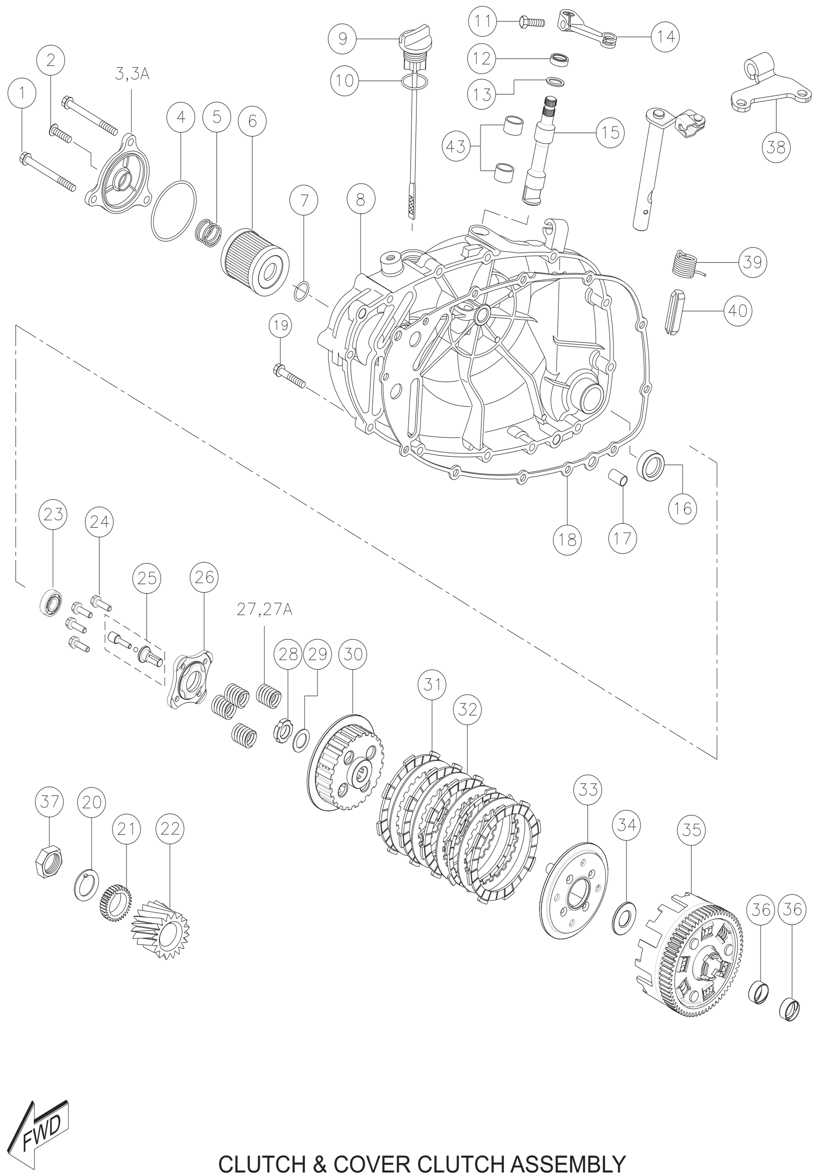

CLUTCH & COVER CLUTCH ASSEMBLY

FIG. NO. 04

CLUTCH & COVER CLUTCH ASSY.

REF. NO.	PART NO.	DESCRIPTION	NO. OFF APACHE RTR 160	NO. OFF APACHE RTR 160 HYPER EDGE	NO. OFF APACHE RTR 160 HYPER EDGE REFRESH	REMARKS
1	M1200540	HEX FLANGE BOLT M6x65	2	2	2	
2	M1200520	HEX FLANGE BOLT M6x16	1	1	1	
3A	M70809607D	CAP OIL FILTER PAINTED	1	1	1	
4	M1080600	O RING 52.6x2.4	1	1	1	
5	M1080620	SPRING OIL FILTER	1	1	1	
6	M1080540	FILTER COMPLETE ENGINE OIL	1	1	1	
7	M1080590	O RING 13x1.9	1	1	1	
8	M70304207D	COVER CLUTCH	1	1	1	
9	N2081150	GAUGE OIL LEVEL	1	1	1	
10	M1080400	O RING 16.8x3.1	1	1	1	
12	M7200490	OIL SEAL 12x18x4	1	1	1	
13	M1200320	PUNCHED WASHER 12.5x17x1	1	1	1	
14	M7321700	ARM CLUTCH RELEASE	1	1	1	
15	M7070350	ROD COMP. CLUTCH RELEASE	1	1	1	
16	N2200550	OIL SEAL 12x2x17	1	1	1	
17	0074010	DOWEL PIN	2	2	2	
18	M1080330	GASKET CLUTCH COVER	1	1	1	
19	M7200740	HEX FLANGE BOLT M6x30	10	10	10	
20	M1080630	WASHER PRIMARY DRIVE GEAR	1	1	1	
21	M1080010	GEAR OIL PUMP DRIVE	1	1	1	
22	M1080080	GEAR PRIMARY DRIVE (21T)	1	1	1	
23	M1200380	BALL BEARING 15x32x9	1	1	1	
24	M1200530	HEX SOCKET CAP SCREW M6x25	4	4	4	
25	M7070130	PIN ASSY CLUTCH RELEASE	1	1	1	

FIG.No.04

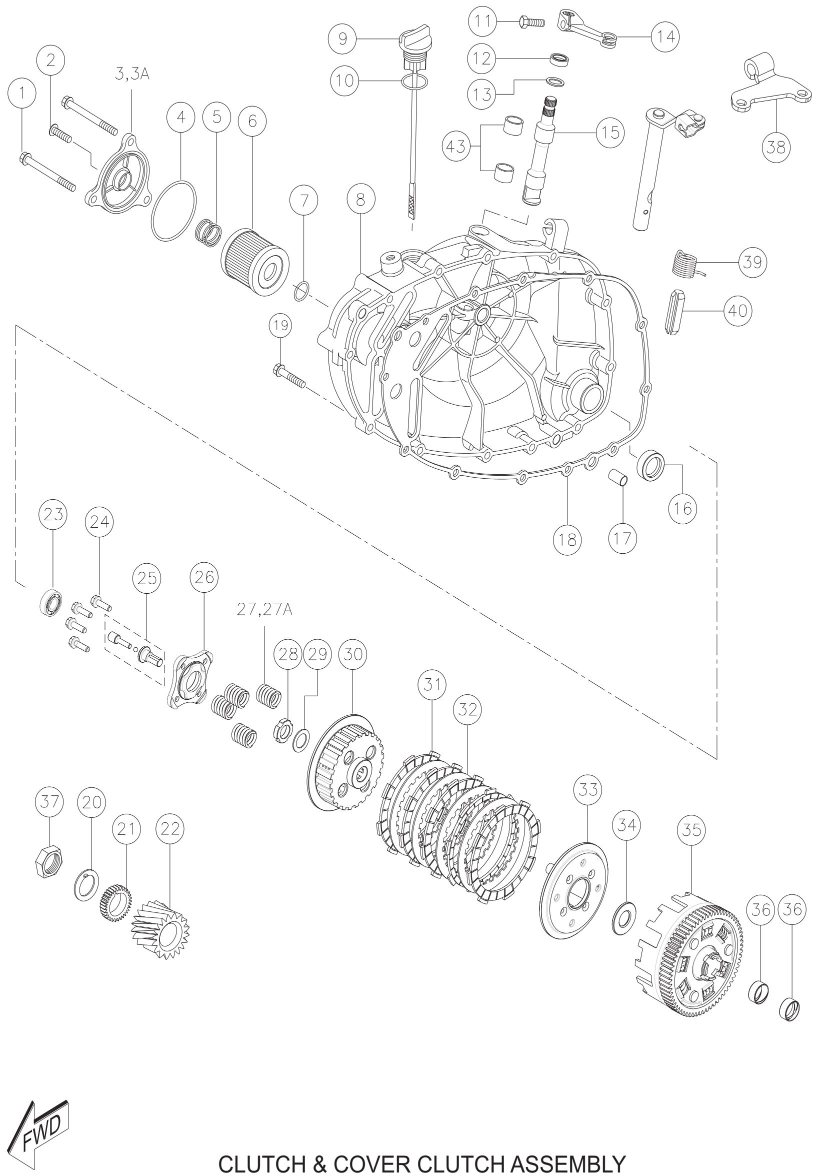

CLUTCH & COVER CLUTCH ASSEMBLY

FIG. NO. 04

CLUTCH & COVER CLUTCH ASSY.

REF. NO.	PART NO.	DESCRIPTION	NO. OFF APACHE			REMARKS
			RTR 160	RTR 160 HYPER EDGE	RTR 160 HYPER EDGE REFRESH	
26	N2070360	PLATE CLUTCH RELEASE	1	1	1	
27	N1070010	SPRING CLUTCH	-	4	4	
27A	M7070440	SPRING CLUTCH	4	-	-	
28	M7070100	NUT CLUTCH SHAFT	1	1	1	
29	M7070110	SPRING WASHER CLUTCH SHAFT	1	1	1	
30	M7070060	HUB CLUTCH	1	1	1	
31	M7321890	SET PLATE CLUTCH DRIVE (5 Nos)	1	1	1	
32	M7321900	SET PLATE CLUTCH DRIVEN (4Nos)	1	1	1	
33	N2070200	DISC CLUTCH PRESSURE	1	1	1	
34	M7070240	WASHER CLUTCH HUB	1	1	1	
35	M7080840	GEAR ASSY. PRIMARY DRIVEN	1	1	1	
36	0339310	BUSH PRIMARY DRIVEN GEAR	2	2	2	
37	M1200250	HEX NUT M16x1.5	1	1	1	
38	M7070330	BRACKET CLUTCH CABLE	1	1	1	
39	M7070380	SPRING CLUTCH CABLE RETURN	1	1	1	
40	M7200500	SPRING DOWEL	1	1	1	
41	M7200510	BEARING BUSH	2	2	2	
42	N9080670	RETAINER	1	1	1	
43	0331748	CRR PAN HEAD SCREW M6x16	1	1	1	

FIG.No.05

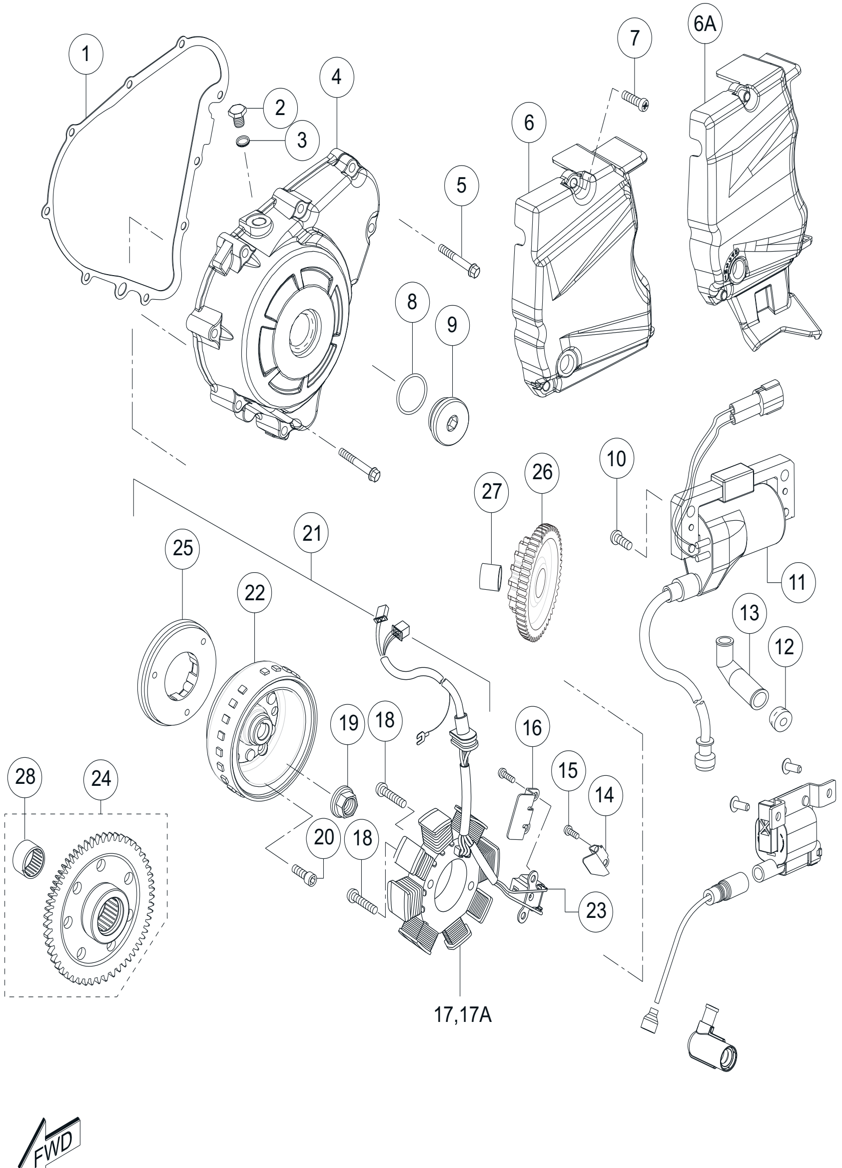

MAGNETO & IGNITION COIL ASSEMBLY

FIG. NO. 05

MAGNETO & IGNITION COIL ASSEMBLY

REF. NO.	PART NO.	DESCRIPTION	NO. OFF APACHE RTR 160	NO. OFF APACHE RTR 160 HYPER EDGE	NO. OFF APACHE RTR 160 HYPER EDGE REFRESH	REMARKS
1	M1080320	GASKET MAGNETO COVER	1	1	1	
2	N2081680	PLUG TDC	1	1	1	
3	M1080420	GASKET TDC PLUG	1	1	1	
4	M70301707D	COVER MAGNETO	1	1	1	
5	M7200700	HEX FLANGE BOLT M6x40	9	9	9	
6	N92210907D	COVER ENGINE SPROCKET	1	1	-	
6A	N9081170	COVER ENGINE SPROCKET	-	-	1	
7	M1200670	CRR PAN HD SCREW M6x20	2	2	2	
8	N2081690	O RING 22.7x3.1	1	1	1	
9	M7080980	PLUG CRANKSHAFT HOLE	1	1	1	
10	M1200610	CRR. PAN HEAD SCREW M6x12	1	1	1	
11	N9060180	COIL ASSEMBLY IGNITION	1	1	1	
12	0098010	SEAL HIGH TENSION CORD	1	1	1	
13	N9060280	CAP ASSEMBLY SPARK PLUG	1	1	1	
14	M1070100	CLAMP MAGNETO LEAD - 2	1	1	1	
15	0331708	CRR PAN HEAD SCREW M5x12	4	4	4	
16	M1121040	CLAMP MAGNETO LEAD -1	1	1	1	
17	N9060300	STATOR ASSEMBLY	1	-	-	
17A	N9322450	STATOR ASSEMBLY	-	1	1	
18	M1200820	CRR PAN HEAD SCREW M6x25	2	2	2	
19	M1200770	HEX FLANGE NUT M12x1.25	1	1	1	
20	M1200790	HEX SOCKET HEAD CAP SCREW M6	3	3	3	
21	N9060400	MAGNETO ASSY. APACHE RTR	1	1	1	
22	N9322460	ROTOR ASSEMBLY ES	1	1	1	
23	N9060320	PULSAR COIL	1	1	1	
24	M1080480	GEAR COMP. STARTER CLUTCH	1	1	1	
25	R1060110	CLUTCH STARTER ONE WAY	1	1	1	
26	M1080460	GEAR STARTER IDLE	1	1	1	
27	M1080490	SPACER STARTER IDLE GEAR	1	1	1	
28	M1200170	NEEDLE ROLLER BEARING	1	1	1	

FIG.No.06

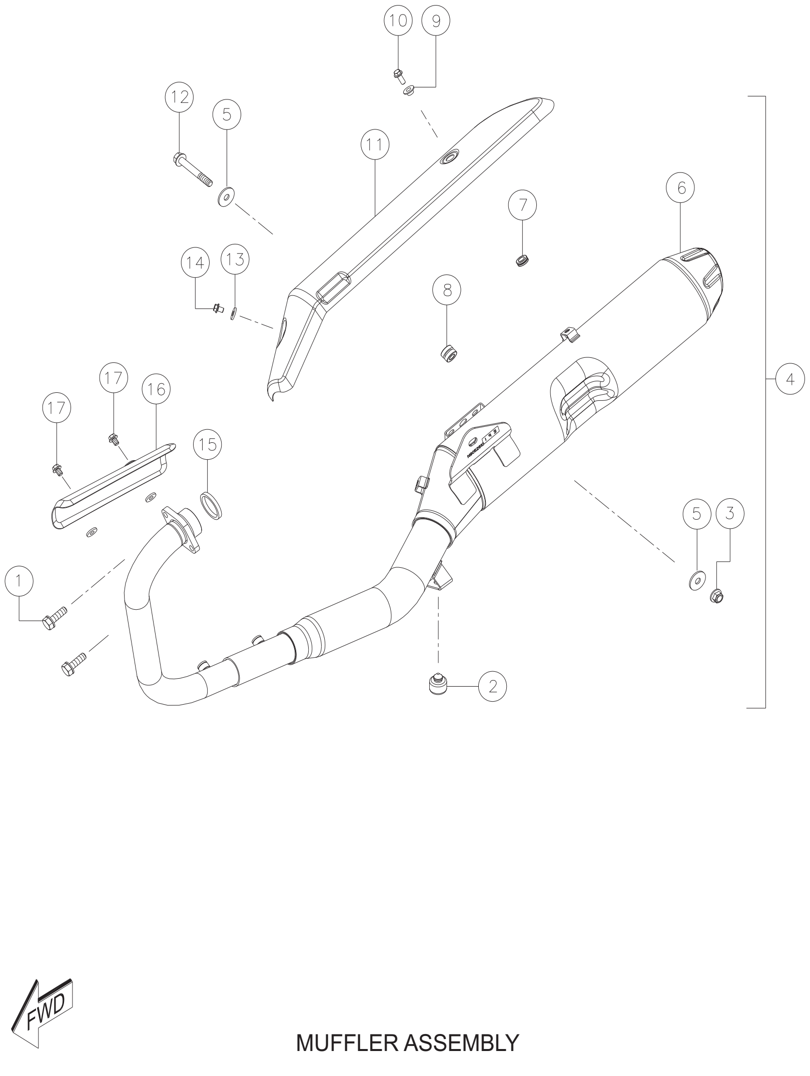

MUFFLER ASSEMBLY

FIG. NO. 06

MUFFLER ASSEMBLY

REF. NO.	PART NO.	DESCRIPTION	NO. OFF APACHE RTR 160	NO. OFF APACHE RTR 160 HYPER EDGE	NO. OFF APACHE RTR 160 HYPER EDGE REFRESH	REMARKS
1	M1200480	HEX FLANGE BOLT M8x25	2	2	2	
2	S1125310	CUSHION	1	1	1	
3	M1200890	HEX FLANGE U NUT M12x1.25	1	1	1	
4	N9052660	MUFFLER ASSY. (WITH GUARD)	1	1	1	
5	N3200210	PUNCHED WASHER 8.2x25x2	2	2	2	
6	N9052610	MUFFLER COMP. (WITHOUT GUARD)	1	1	1	
7	N9051850	CUSHION GUARD EXHAUST	1	1	1	
8	N9051520	DAMPER BRACKET EXHAUST	1	1	1	
9	N9051860	CUP WASHER	1	1	1	
10	N9200110	HEX FL. BOLT M6x15	1	1	1	
11	N9221180	GUARD EXHAUST REAR	1	1	1	
12	N8200150	HEX BOLT M8x60	1	1	1	
13	N8050690	INSULATOR GUARD EXHAUST	1	1	1	
14	C8200040	HEX FL. BOLT M6x1.0x12	1	1	1	
15	M7051070	GASKET EXHAUST PIPE	1	1	1	
16	N9221200	GUARD EXHAUST FRONT	1	1	1	
17	N9200100	HEX FLANGE BOLT M6x8	2	2	2	

FIG.No.07

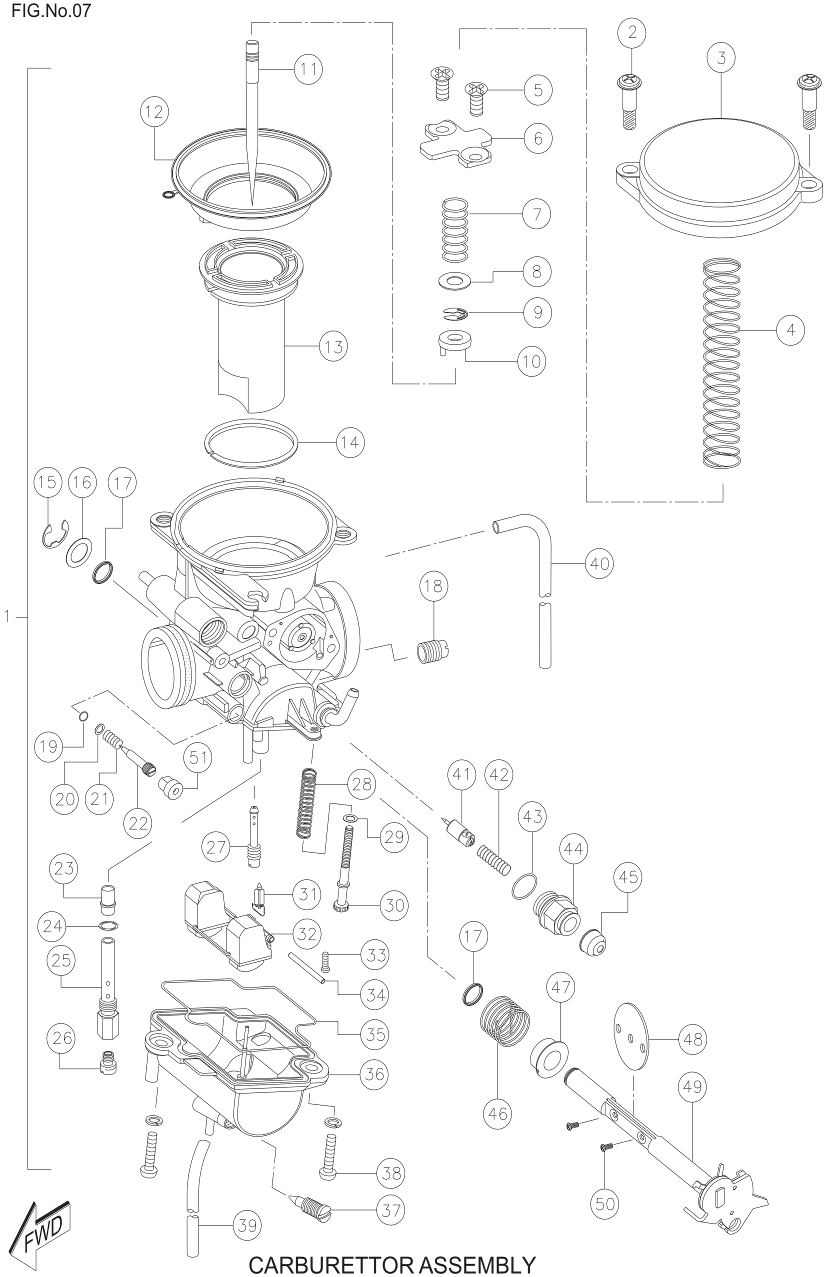

CARBURETTOR ASSEMBLY

FIG. NO. 07

CARBURETTOR ASSEMBLY

REF. NO.	PART NO.	DESCRIPTION	NO. OFF APACHE RTR 160	NO. OFF APACHE RTR 160 HYPER EDGE	NO. OFF APACHE RTR 160 HYPER EDGE REFRESH	REMARKS
1	N9041380N	CARBURETTOR ASSY.	1	1	1	
2	M1040530	SCREW DIAPHRAGM COVER	2	2	2	
3	M1040190	COVER DIAPHRAGM	2	2	2	
4	M7320220	SPRING DIAPHRAGM	1	1	1	
5	M1040760	SCREW PLATE JET NEEDLE	2	2	2	
6	M1040910	PLATE JET NEEDLE	1	1	1	
7	M1040770	SPRING JET NEEDLE	1	1	1	
8	M1040780	PACKING JET NEEDLE	1	1	1	
9	M1040250	E- RING JET NEEDLE	1	1	1	
10	M7321280	RING JET NEEDLE	1	1	1	
11	M7321290	JET NEEDLE (NEEDLE)	1	1	1	
12	M1040220	DIAPHRAGM	1	1	1	
13	N9321970	PISTON VALVE	1	1	1	
14	M1040800	RING PISTON VALVE	1	1	1	
15	M1040500	E-RING THROTTLE SHAFT	1	1	1	
16	M1040510	PACKING THROTTLE SHAFT	1	1	1	
17	M1040520	O RING THROTTLE SHAFT	2	2	2	
18	M1041070	AIR JET (PAJ 2) - 145	1	1	1	
19	M1040430	O RING MCS	1	1	1	
20	M1040420	WASHER MCS	1	1	1	
21	M1040410	SPRING MCS	1	1	1	
22	M7321300	MIXTURE CONTROL SCREW (MCS)	1	1	1	
23	M7320260	NEEDLE JET (JET)	1	1	1	
24	M1040810	O RING JET HOLDER	1	1	1	
25	M7321310	JET HOLDER	1	1	1	
26	N9321990	MAIN JET (105)	1	1	1	

FIG.No.07

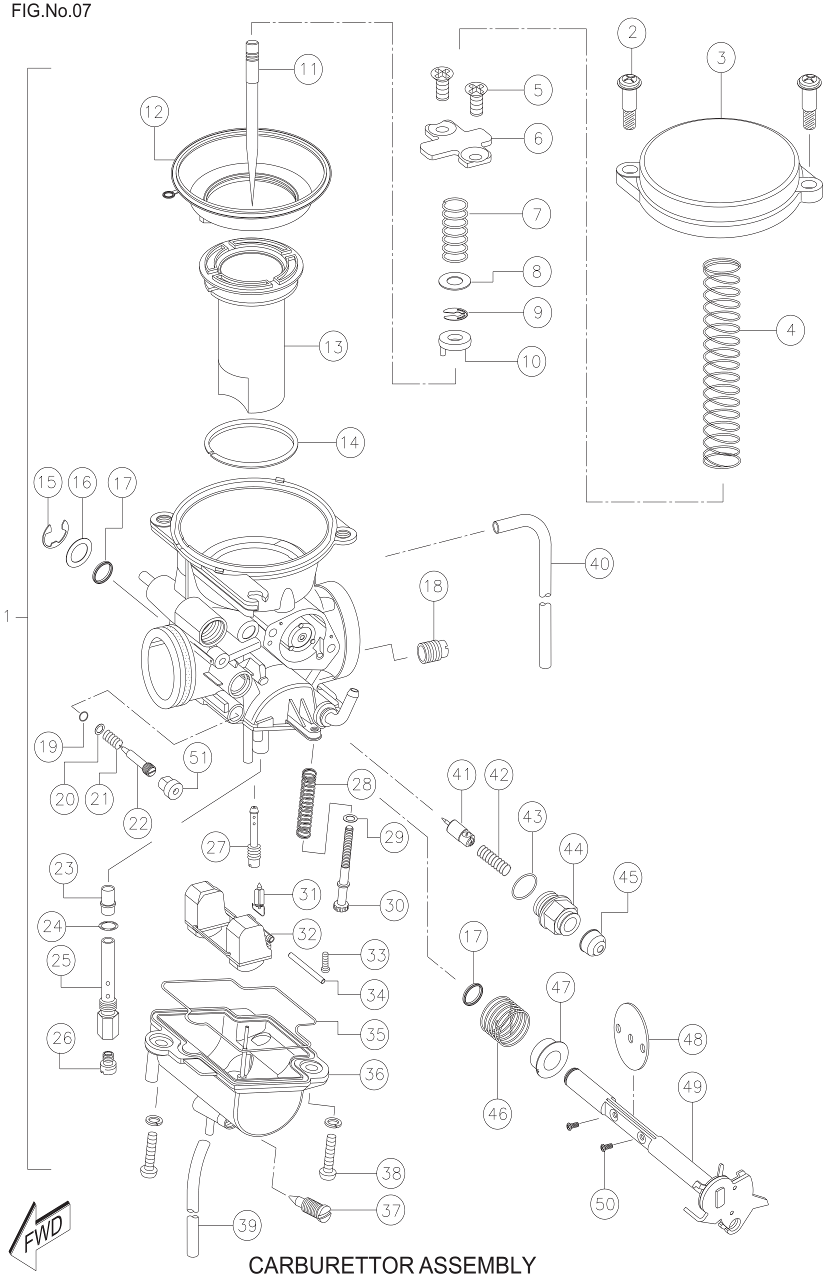

CARBURETTOR ASSEMBLY

FIG. NO. 07

CARBURETTOR ASSEMBLY

REF. NO.	PART NO.	DESCRIPTION	NO. OFF APACHE RTR 160	NO. OFF APACHE RTR 160 HYPER EDGE	NO. OFF APACHE RTR 160 HYPER EDGE REFRESH	REMARKS
27	N9322000	PILOT JET (15)	1	1	1	
28	M1040490	SPRING IDLING SCREW	1	1	1	
29	M1040470	PACKING IDLING SCREW	1	1	1	
30	M1040460	IDLING SCREW	1	1	1	
31	M1040270	NEEDLE VALVE ASSEMBLY	1	1	1	
32	M1040340	FLOAT ASSEMBLY	1	1	1	
33	M1040280	SCREW VALVE SEAT	1	1	1	
34	M1040290	PIN FLOAT	1	1	1	
35	M1040820	SEAL BOWL	1	1	1	
36	M1040300	FLOAT BODY ASSEMBLY	1	1	1	
37	M1040440	SCREW DRAIN	1	1	1	
38	M1040540	SCREW FLOAT CHAMBER	2	2	2	
39	M7321340	HOSE DRAIN	1	1	1	
40	M7321350	HOSE AIR VENT	1	1	1	
41	M1040370	PLUNGER STARTER	1	1	1	
42	M1040380	SPRING STARTER	1	1	1	
43	M1040870	O RING STARTER	1	1	1	
44	M1040390	GUIDE HOLDER ASSEMBLY	1	1	1	
45	M1040570	CAP STARTER	1	1	1	
46	-----	SPRING THROTTLE SHAFT	1	1	1	N.S
47	-----	BUSH THROTTLE SAHFT	1	1	1	N.S
48	-----	THROTTLE VALVE	1	1	1	N.S
49	-----	THROTTLE SHAFT	1	1	1	N.S
50	M1040900	SCREW THROTTLE VALVE	1	1	1	
51	M1040940	CAP CARBURETTOR	1	1	1	
52	N9324480	PLUNGER ASSY. KIT	1	1	1	

N.S - NOT SERVICE

FIG.No.08

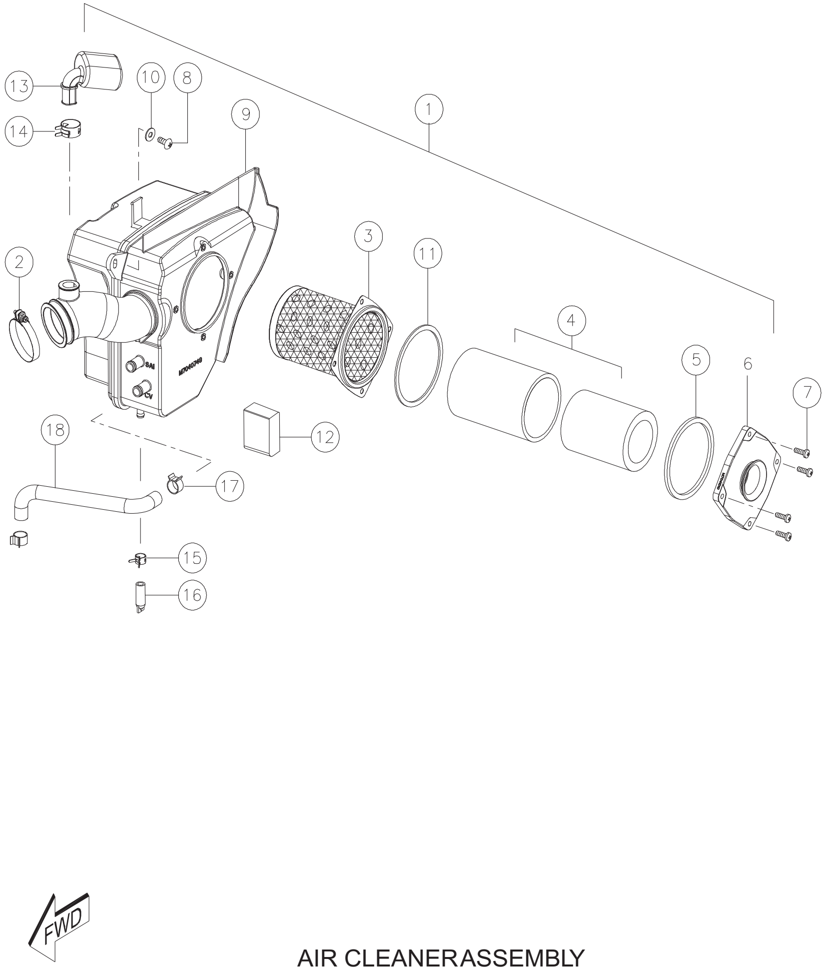

AIR CLEANERASSEMBLY

FIG. NO. 08

AIR CLEANER ASSEMBLY

REF. NO.	PART NO.	DESCRIPTION	NO. OFF			REMARKS
			APACHE			
			RTR 160	RTR 160 HYPER EDGE	RTR 160 HYPER EDGE REFRESH	
1	M7041070	AIR CLEANER ASSEMBLY	1	1	1	
2	M1040630	CLAMP OUTLET PIPE	1	1	1	
3	M1040170	TRAP COMP. FLAME	1	1	1	
4	M1040700	FILTER COMP. AIR CLEANER	1	1	1	
5	M1040670	GASKET INLET	1	1	1	
6	M7041090	INLET COMP. AIR CLEANER	1	1	1	
7	M1200660	CRR PAN HEAD SCREW M5x16	4	4	4	
8	0332275	CRR PAN HEAD SCREW	2	2	2	
9	M7040749	CASE AIR CLEANER	1	1	1	
10	0335608	PUNCHED WASHER 6.5x16x1.2	2	2	2	
11	M1040610	GASKET TRAP FLAME	1	1	1	
12	M7040790	FOAM SAI	1	1	1	
13	M7040780	RESONATOR	1	1	1	
14	M7040820	HOSE CLIP DIA 18	1	1	1	
15	M7041030	HOSE CLIP DRAIN PIPE	1	1	1	
16	N3040360	DRAIN PIPE	1	1	1	
17	K140820	HOSE CLIP	2	2	2	
18	M7041000	BREATHER HOSE PCV	1	1	1	
19	N9321790	FOAM KIT	1	1	1	**

** - REF. KIT & KIT CONTENTS

FIG.No.09

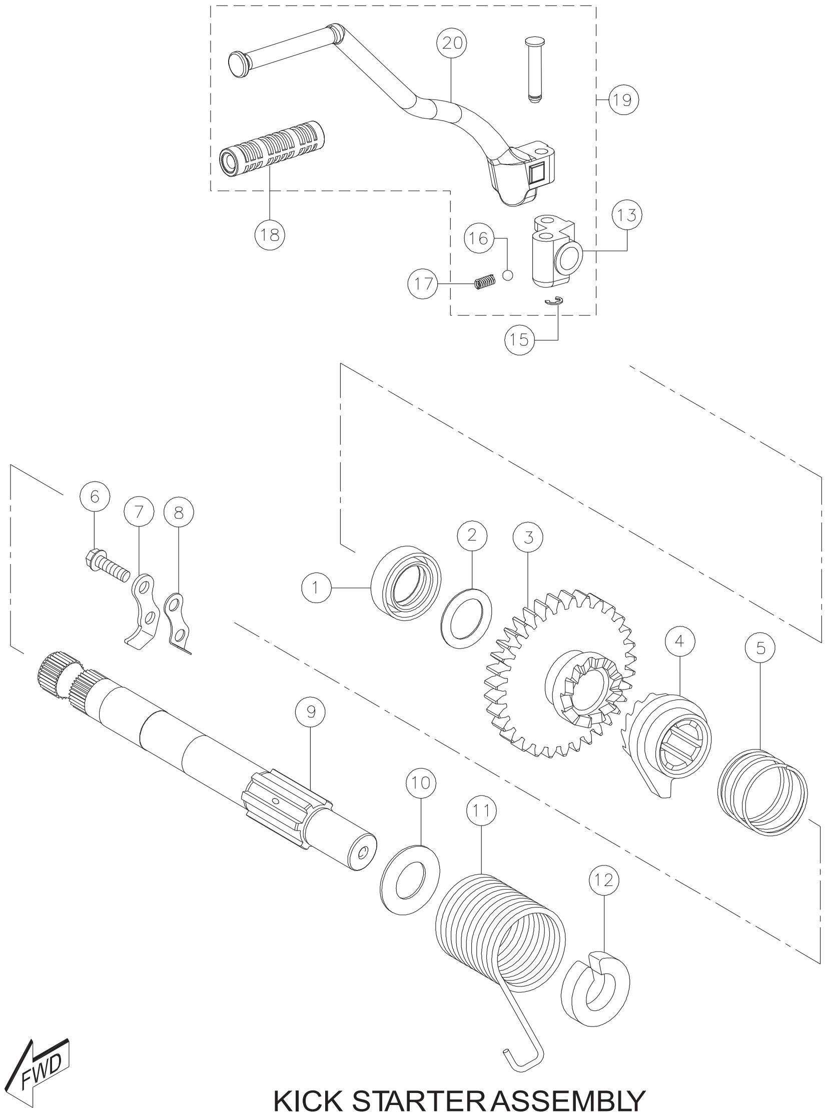

KICK STARTER ASSEMBLY

FIG. NO. 09

KICK STARTER ASSEMBLY

REF. NO.	PART NO.	DESCRIPTION	NO. OFF APACHE RTR 160	NO. OFF APACHE RTR 160 HYPER EDGE	NO. OFF APACHE RTR 160 HYPER EDGE REFRESH	REMARKS
1	N2081720	OIL SEAL KICK STARTER SHAFT	1	1	1	
2	0335014	SHIM 15x30x1	1	1	1	
3	M7080570	GEAR KICK STARTER DRIVE	1	1	1	
4	M1080890	RATCHET KICK STARTER	1	1	1	
5	M1080930	SPRING KICK STARTER	1	1	1	
6	M1201190	HEX SCREW M6x30	2	2	2	
7	M1080900	GUIDE KICK STARTER	1	1	1	
8	N2081650	STOPPER KICK STARTER	1	1	1	
9	M7080740	SHAFT KICK STARTER	1	1	1	
10	0335714	SHIM 16x30x0.5	1	1	1	
11	M1080940	SPRING KICK SHAFT RETURN	1	1	1	
12	N3080270	GUIDE KICK STARTER SPRING	1	1	1	
13	M7081950	JOINT KICK STARTER	1	1	1	
14	N2081450	PIN LEVER ASSY. KICK STARTER	1	1	1	
15	N3200240	CIRCLIP - TYPE E	1	1	1	
16	N2081440	BALL LEVER ASSY. K S LEVER	1	1	1	
17	N2081430	SPRING LEVER ASSY. KICK STARTER	1	1	1	
18	N2081760	RUBBER KICK STARTER LEVER	1	1	1	
19	M7081500	LEVER ASSY. KICK STARTER	1	1	1	
20	M7081490	LEVER KICK STARTER	1	1	1	

FIG.No.10

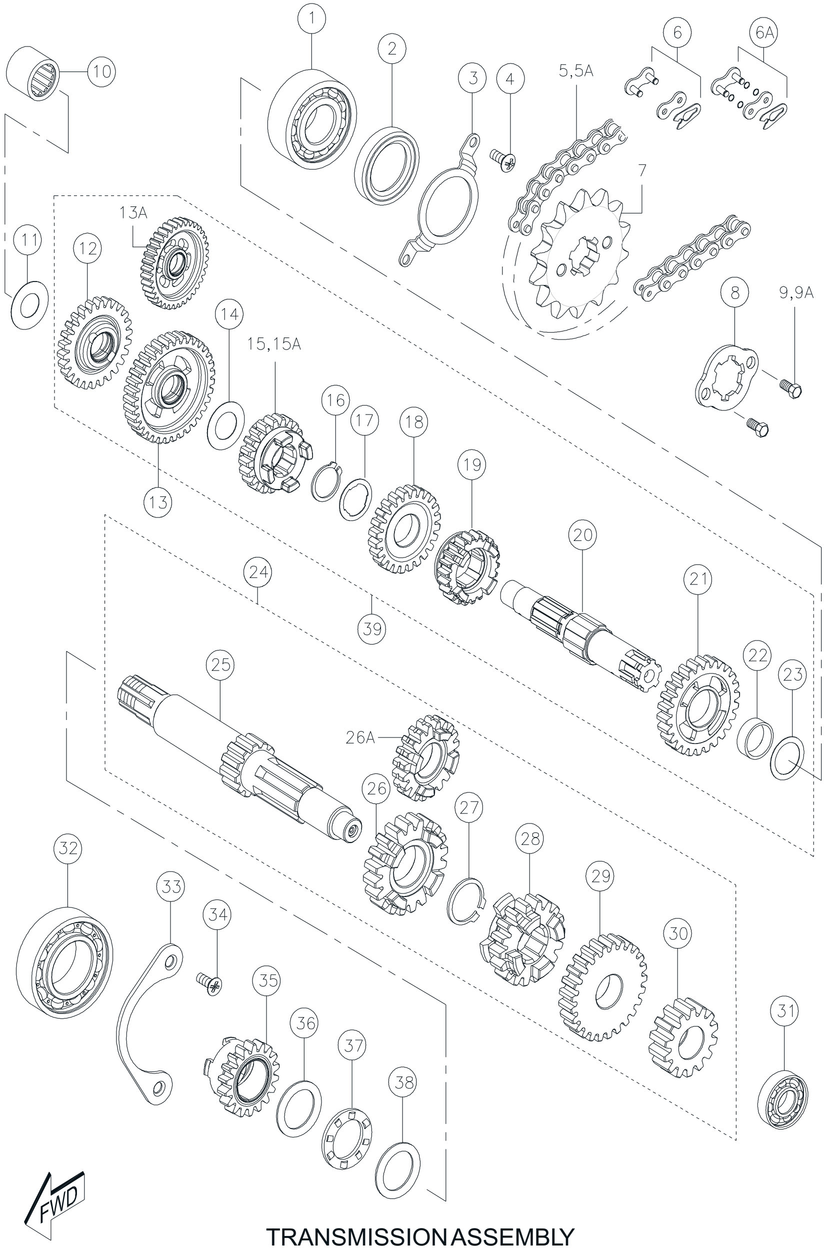

TRANSMISSION ASSEMBLY

FIG. NO. 10

TRANSMISSION ASSEMBLY

REF. NO.	PART NO.	DESCRIPTION	NO. OFF APACHE RTR 160	NO. OFF APACHE RTR 160 HYPER EDGE	NO. OFF APACHE RTR 160 HYPER EDGE REFRESH	REMARKS
1	M1200260	BALL BEARING 20x47x14	1	1	1	
2	M7200250	OIL SEAL 20x40x6	1	1	1	
3	M7081100	RETAINER DRIVE SHAFT	1	1	1	
4	0332068	CRPH SCREW M6x12	2	2	2	
5	N9111770	CHAIN ASSY. 124 L	1	-	-	
5A	N9112610	DRIVE CHAIN WITH O RING	-	1	1	
6	M1320420	LINK SET CHAIN	1	-	-	
6A	N9322720	LINK SET CHAIN	-	1	1	
7	M7080920	SPROCKET ENGINE 13T	1	1	1	
8	M7080870	LOCK PLATE ENGINE SPROCKET	1	1	1	
9	M7200200	HEX SOCKET CAP SCR NUT M5x12	2	-	-	
9A	M1200940	HEX SCREW M5x10	-	2	2	
10	M7200260	NEEDLE ROLLER BEARING 15x23x12	1	1	1	
11	0335014	SHIM 15x30x1.0	1	1	1	
12	M7080400	GEAR COMP.KICK START.IDLE(26T)	1	1	1	
13	M7080340	GEAR COMP. 1st DRIVEN	1	-	-	
13A	R1080800	GEAR COMP. 1st DRIVEN	-	1	1	
14	M7200420	SHIM	1	1	1	
15	M7080310	GEAR 4th DRIVEN	1	-	-	
15A	R1081130	GEAR 4th DRIVEN	-	1	1	
16	0330174	CIRCLIP 20x1.2	1	1	1	
17	M7080860	SHIM	1	1	1	
18	M7080280	GEAR 3rd DRIVEN	1	1	1	
19	M7080320	GEAR 5th DRIVEN	1	1	1	
20	M7081300	SHAFT COMP. DRIVE	1	1	1	
21	M7080890	GEAR 2nd DRIVEN (27T)	1	1	1	
22	N5080060	BUSH Ist DRIVEN	1	1	1	

FIG.No.10

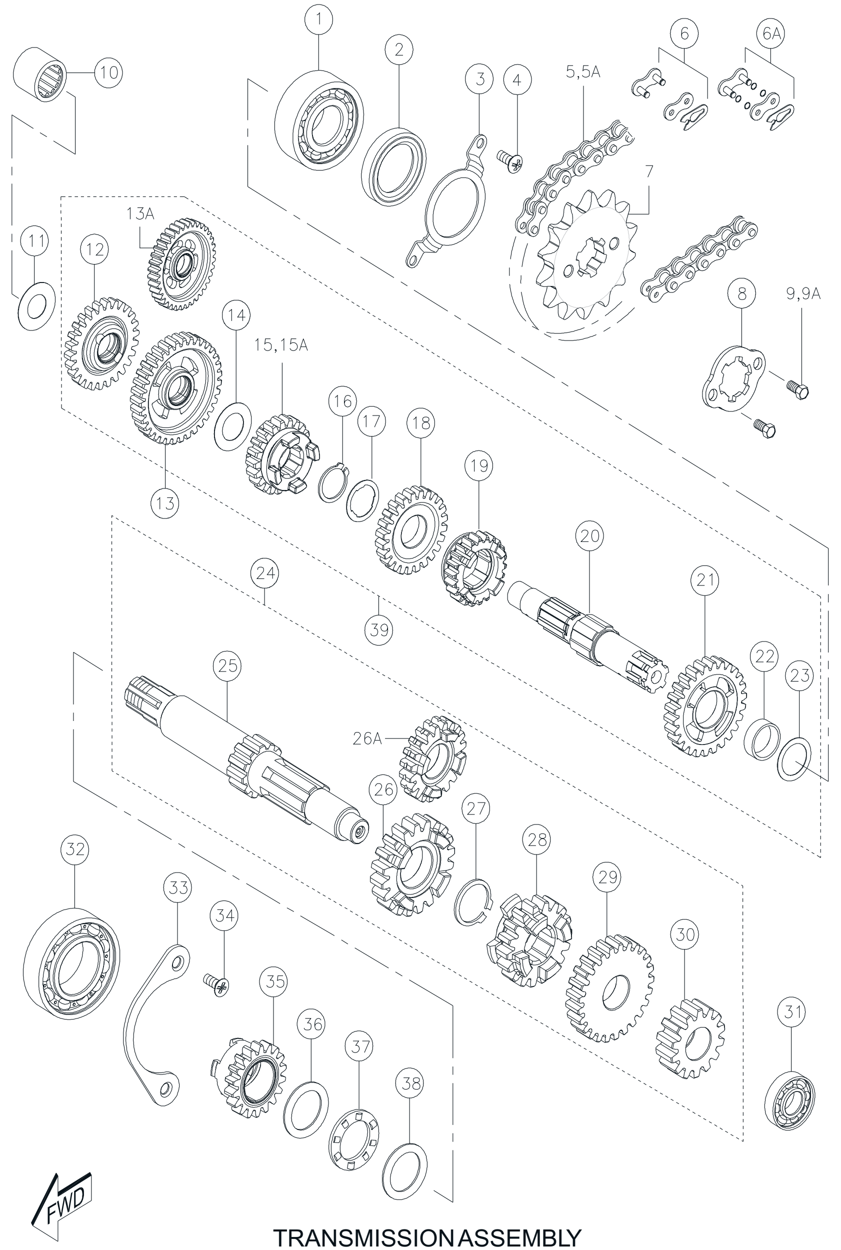

TRANSMISSION ASSEMBLY

FIG. NO. 10

TRANSMISSION ASSEMBLY

REF. NO.	PART NO.	DESCRIPTION	NO. OFF APACHE RTR 160	NO. OFF APACHE RTR 160 HYPER EDGE	NO. OFF APACHE RTR 160 HYPER EDGE REFRESH	REMARKS
23	M7200040	THRUST WASHER	1	1	1	
24	M7080460	COUNTER SHAFT ASSY.	1	1	1	
25	M7080439	SHAFT COMP. COUNTER	1	1	1	
26	M7080309	GEAR 4th DRIVE	1	-	-	
26A	R1081120	GEAR 4th DRIVE	-	1	1	
27	0330174	CIRCLIP	1	1	1	
28	M7080339	GEAR 3rd DRIVE	1	1	1	
29	M7080299	GEAR 5TH DRIVE	1	1	1	
30	M7080269	GEAR 2nd DRIVE	1	1	1	
31	M1200300	BALL BEARING 12x28x8	1	1	1	
32	M1200290	BALL BEARING 30x15x13	1	1	1	
33	M7080530	RETAINER COUNTER BEARING	1	1	1	
34	0332238	RECESSED CSK HEAD SCREW	2	2	2	
35	M7080370	GEAR COMP. KICK STARTER DRIVEN	1	1	1	
36	M7200460	THRUST WASHER	1	1	1	
37	C8080260	BEARING KS DRIVEN GEAR	1	1	1	
38	M7200430	SHIM	1	1	1	
39	M7080450	DRIVE SHAFT SET	1	1	1	N.I , **
40	N9321930	CHAIN AND SPROCKET KIT(13/44/124)	1	-	-	N.I , **
40A	N9322710	CHAIN AND SPROCKET KIT(13/44/124)	-	1	1	N.I , **
41	M7321580	OIL SEAL KIT	1	1	1	N.I , **

N.I - NOT ILLUSTRATE
** - REF. KIT & KIT CONTENTS

FIG.No.11

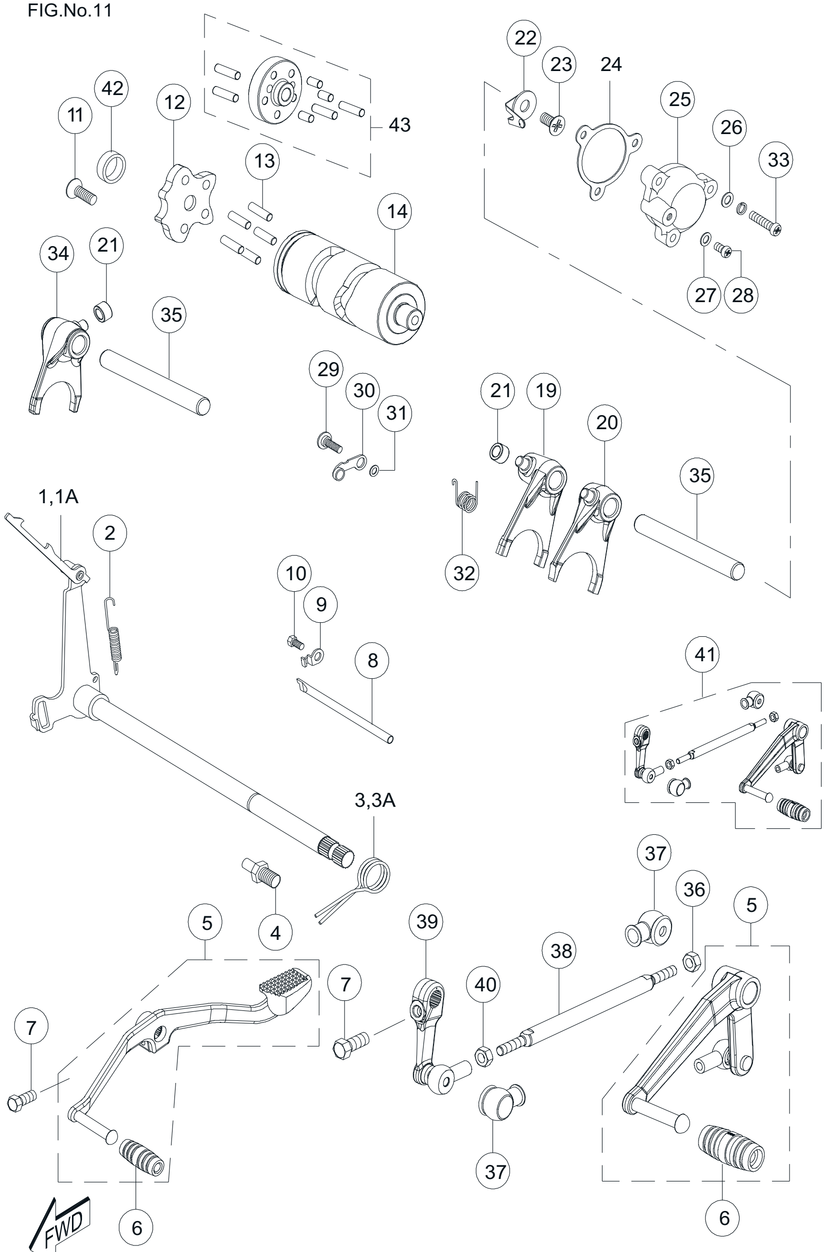

GEAR SHIFT MECHANISMASSEMBLY

FIG. NO. 11

GEAR SHIFT MECHANISM ASSEMBLY

REF. NO.	PART NO.	DESCRIPTION	NO. OFF APACHE RTR 160	NO. OFF APACHE RTR 160 HYPER EDGE	NO. OFF APACHE RTR 160 HYPER EDGE REFRESH	REMARKS
1	M1081450	SHAFT COMP. GEAR SHIFT	1	1	-	
1A	M7081790	SHAFT COMP. GEAR SHIFT	-	-	1	
2	3040510	SPRING GEAR SHIFT STARTER	1	1	1	*
3	8081530	SPRING GEAR SHIFT RETURN	1	-	-	*
3A	M7081840	SPRING GEAR SHIFT RETURN	-	1	1	*
4	8081410	STOPPER GEAR SHIFT ARM	1	1	1	
5	M7081640	LEVER ASSY. GEAR SHIFT	1	1	1	
6	M7081740	RUBBER GEAR SHIFT LEVER	1	1	1	
7	420462700	HEX SCREW M6x20	1	1	1	
8	M7080690	GUIDE T/M OIL	1	1	1	
9	M1080740	RETAINER T/M OIL GUIDE	1	1	1	
10	0332068	CRR PAN HEAD SCREW M6x12	1	1	1	
11	0331748	CRPH SCREW M6x16	1	1	1	
12	M7081810	INDEX STAR	1	1	1	
13	3044034	ROLLER CAM DRIVE (LONG)	5	5	5	
14	M7081800	CAM GEAR SHIFT	1	1	1	
15-18	N.I	-------------------	-	-	-	
19	M7080590	FORK GEAR SHIFT No.2	1	1	1	
20	M7080580	FORK GEAR SHIFT No.1	1	1	1	
21	N2081570	SPACER ROLLER GEAR SHIFT FORK PIN	3	3	3	
22	N2060100	CONTACT COMP. GEAR SHIFT SWITCH	1	1	1	
23	0332238	RECESSED CSK HEAD SCREW	1	1	1	
24	M7081850	GASKET GEAR SHIFT SWITCH	1	1	1	
25	M7081860	BODY GEAR SHIFT SWITCH	1	1	1	
26	0335068	PUNCHED WASHER 4.3x10x.8	3	-	-	

RTR160

FIG.No.11

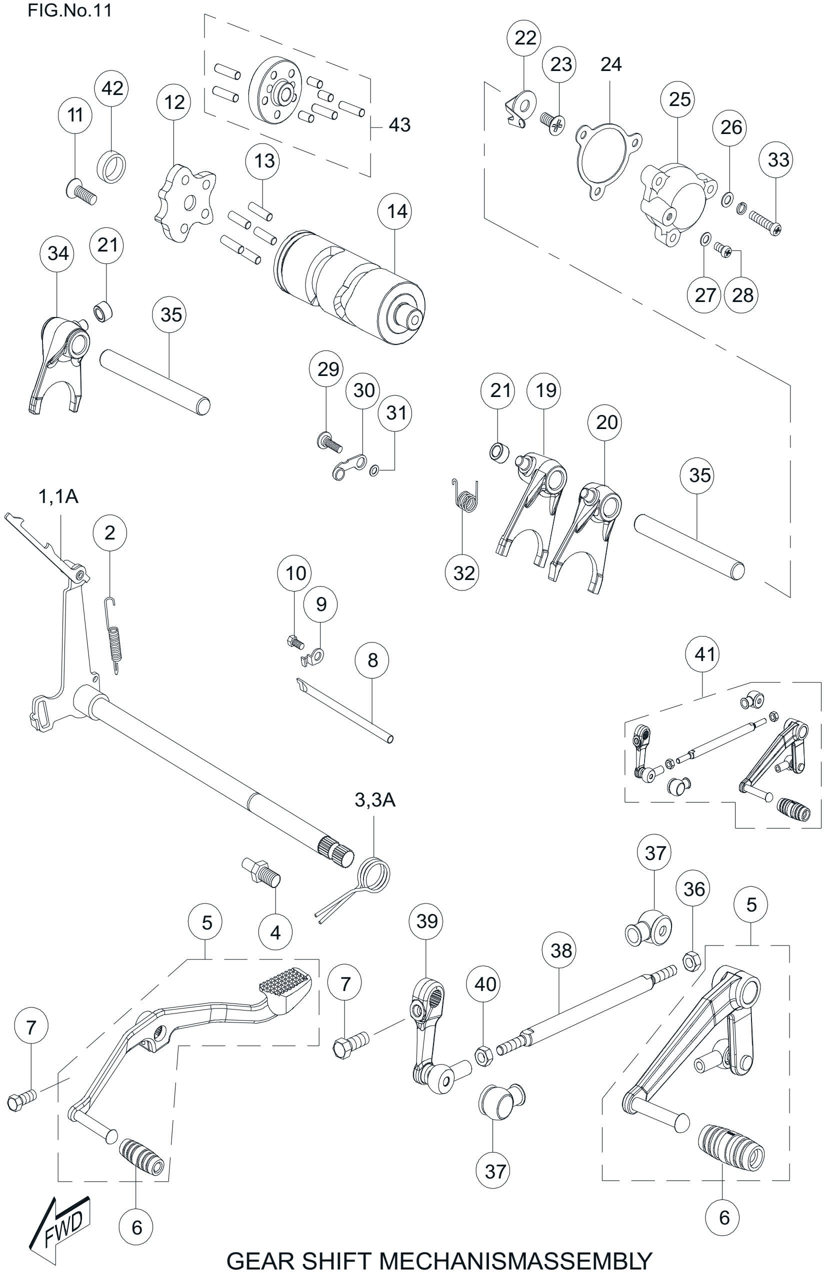

GEAR SHIFT MECHANISMASSEMBLY

FIG. NO. 11

GEAR SHIFT MECHANISM ASSEMBLY

REF. NO.	PART NO.	DESCRIPTION	NO. OFF APACHE RTR 160	NO. OFF APACHE RTR 160 HYPER EDGE	NO. OFF APACHE RTR 160 HYPER EDGE REFRESH	REMARKS
27	0335548	PUNCHED WASHER 3.3x8x.5	1	1	1	
28	0332018	CRR PAN SCREW M3x4	1	1	1	
29	M1080830	BOLT GEAR SHIFT CAM STOPPER	1	1	1	
30	M6080090	STOPPER COMPLETE GEAR SHIFT	1	1	1	
31	M1200690	SHIM 6x14x1	1	1	1	
32	M7081290	SPRING GEAR SHIFT CAM STOPPER	1	1	1	
33	F200098	SCREW M5x20	3	3	3	
34	M7080470	FORK GEAR SHIFT HIGH SPEED	1	1	1	
35	M7080520	SHAFT SHIFT FORK	2	2	2	
36	420305700	HEX NUT M6	1	1	1	
37	M7081450	GROMMET	2	2	2	
38	M7081370	STUD GEAR SHIFT	1	1	1	
39	M7081400	LINK GEAR SHIFT ASSY.	1	1	1	
40	M7200550	HEX NUT M6	2	2	2	
41	M7081650	GEAR SHIFT LINKAGE ASSY.	1	1	1	
42	M7081870	BEARING BUSH CAM GEAR SHIFT	-	1	1	
43	M7081820	PIN COMP HOLDER	-	1	1	

FIG.No.12

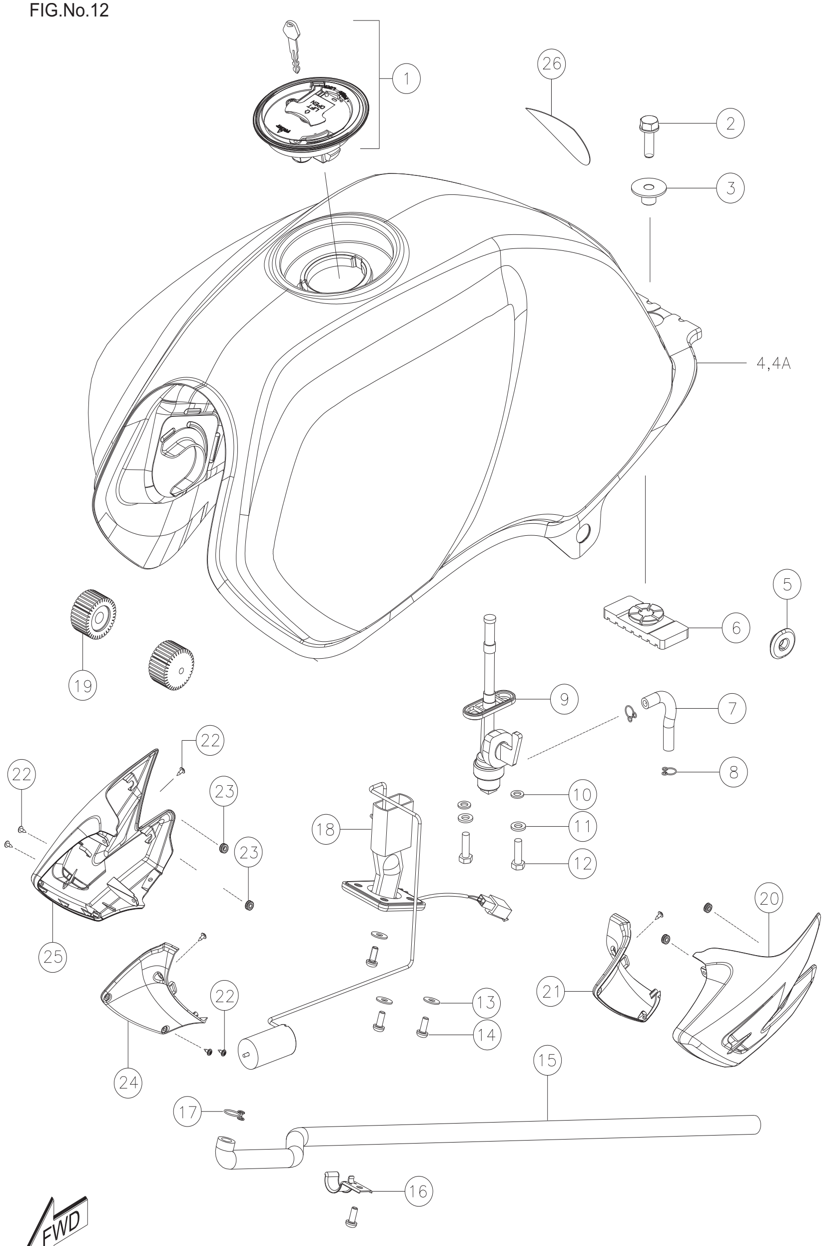

FUEL TANK & FUEL COCK ASSY.

FIG. NO. 12

FUEL TANK & FUEL COCK ASSY.

REF. NO.	PART NO.	DESCRIPTION	NO. OFF APACHE RTR 160	NO. OFF APACHE RTR 160 HYPER EDGE	NO. OFF APACHE RTR 160 HYPER EDGE REFRESH	REMARKS
1	N9140470	CAP FUEL TANK	1	1	-	
2	M1200480	HEX FLANGE BOLT M8x25	1	1	-	
3	N9140540	BUSH FUEL TANK REAR MTG.	1	1	-	
4	-----	FUEL TANK COMP.	1	-	-	REF. COLOR PART PAGE
4A	-----	FUEL TANK COMP.	-	1	-	REF. COLOR PART PAGE
5	N8220400	CUSHION FRAME COVER	2	2	-	
6	N9140530	CUSHION FUEL TANK REAR MTG.	1	1	-	
7	M1140220	HOSE, FUEL	1	1	-	
8	414147000	HOSE CLIP	2	2	-	
9	N9140670	FUEL COCK ASSY.	1	1	-	
10	N3140120	GASKET FUEL COCK	2	2	-	
11	420001700	PUNCHED WASHER	2	2	-	
12	420462700	HEX SCREW M6x20	2	2	-	
13	0335558	PUNCHED WASHER	3	3	-	
14	0331708	CRR PAN HEAD SCREW	4	4	-	
15	N9140650	HOSE FUEL TANK	1	1	-	
16	N9140700	BRACKET FUEL HOSE	1	1	-	
17	M1040650	HOSE CLIP	1	1	-	
18	N9160640	FUEL GAUGE ASSY.	1	1	-	
19	N2140060	CUSHION FUEL TANK FRONT	2	2	-	
20	-----	COVER FUEL TANK LH	1	1	-	REF. COLOR PART PAGE
21	N92218595D	COVER FUEL TANK INNER LH	1	1	-	
22	N3200340	CRR FL. PAN HD TAP SCR 4.2x13	8	8	-	
23	N9141000	CUSHION COVER FUEL TANK	4	4	-	
24	N92218695D	COVER FUEL TANK INNER RH	1	1	-	
25	-----	COVER FUEL TANK RH	1	1	-	REF. COLOR PART PAGE
26	N3210190	STICKER PROTECTION	1	1	-	

FIG.No.12A

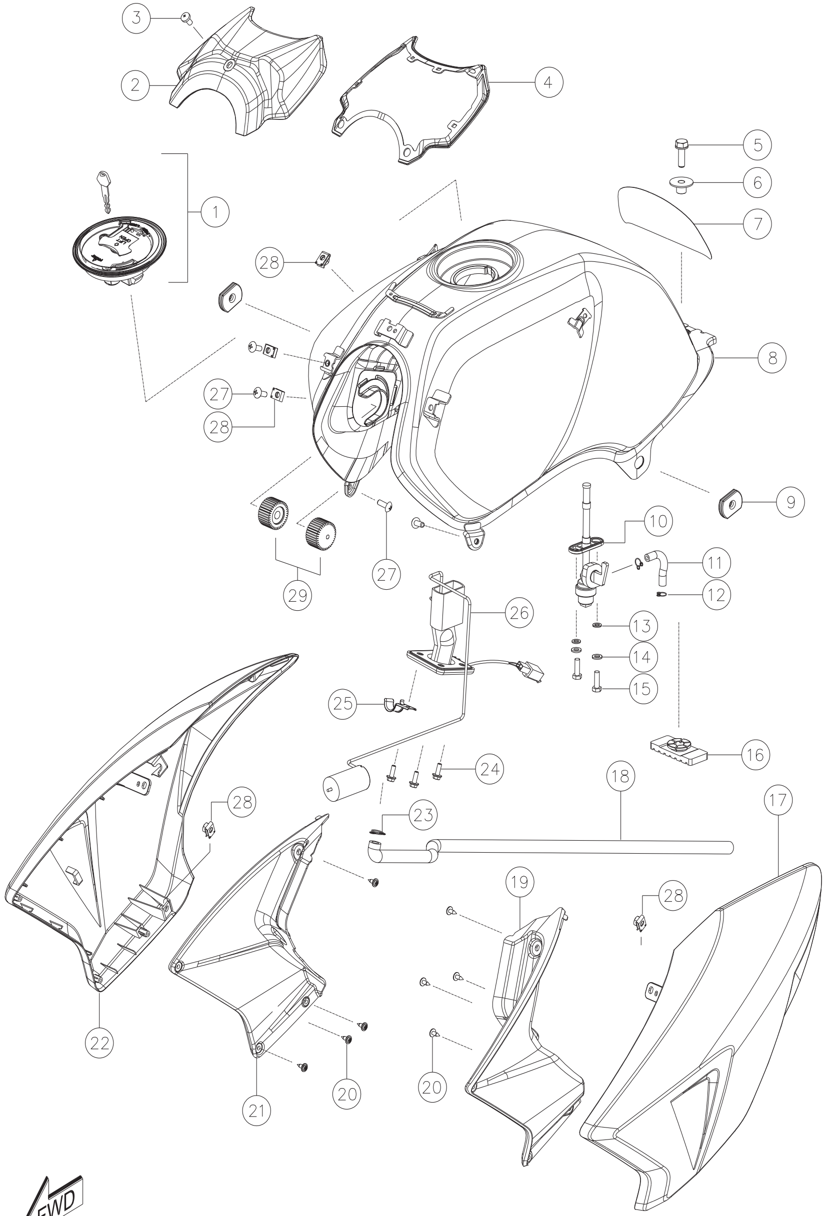

FUEL TANK & FUEL COCK ASSY. (NEW)

FIG. NO. 12A

FUEL TANK & FUEL COCK ASSY. (NEW)

REF. NO.	PART NO.	DESCRIPTION	NO. OFF APACHE RTR 160	NO. OFF APACHE RTR 160 HYPER EDGE	NO. OFF APACHE RTR 160 HYPER EDGE REFRESH	REMARKS
1	N9140470	CAP FUEL TANK	-	-	1	
2	N9223920	COVER FUEL TANK ASSY. TOP	-	-	1	(WITH BEADING)
3	P3200010	CRPH SCREW M6x12	-	-	1	
4	N9223380	BEADING COVER FUEL TANK TOP	-	-	1	
5	M1200480	HEX FLANGE BOLT M8x25	-	-	1	
6	N9140540	BUSH FUEL TANK REAR MTG.	-	-	1	
7	N9224850	STICKER PROTECTION	-	-	1	
8	-----	FUEL TANK COMP.	-	-	1	REF. COLOR PART PAGE
9	K122810	CUSHION FRAME COVER	-	-	1	
10	N9140670	FUEL COCK ASSY.	-	-	1	
11	M1140220	HOSE, FUEL	-	-	1	
12	414147000	HOSE CLIP	-	-	1	
13	N3140120	GASKET FUEL COCK	-	-	1	
14	420001700	PUNCHED WASHER	-	-	1	
15	420462700	HEX SCREW M6x20	-	-	1	
16	N9140530	CUSHION FUEL TANK RR MTG.	-	-	1	
17	-----	COVER FUEL TANK OUTER LH	-	-	1	REF. COLOR PART PAGE
18	N9140650	HOSE FUEL TANK	-	-	1	
19	N9222890	COVER FUEL TANK INNER LH	-	-	1	
20	N3200340	CRR FL. PAN HD TAP SCR 4.2x13	-	-	8	
21	N9222910	COVER FUEL TANK INNER RH	-	-	1	
22	-----	COVER FUEL TANK OUTER RH	-	-	1	REF. COLOR PART PAGE
23	M1040650	HOSE CLIP	-	-	1	
24	R1200380	HEX FLANGE BOLT M5x14	-	-	4	
25	N9140700	BRACKET FUEL HOSE	-	-	1	
26	N9160640	FUEL GAUGE ASSY.	-	-	1	
27	0332275	CRPH SCREW M6x16	-	-	4	
28	K3200840	RETAINER CLIP NUT M6	-	-	5	
29	N2140060	CUSHION FUEL TANK FRONT	-	-	1	
30	N9223110	GROMMET COVER FUEL TANK	-	-	1	N.I
31	N9223120	GROMMET COVER FUEL TANK	-	-	1	N.I

N.I - NOT ILLUSTRATED

RTR160

FIG.No.13

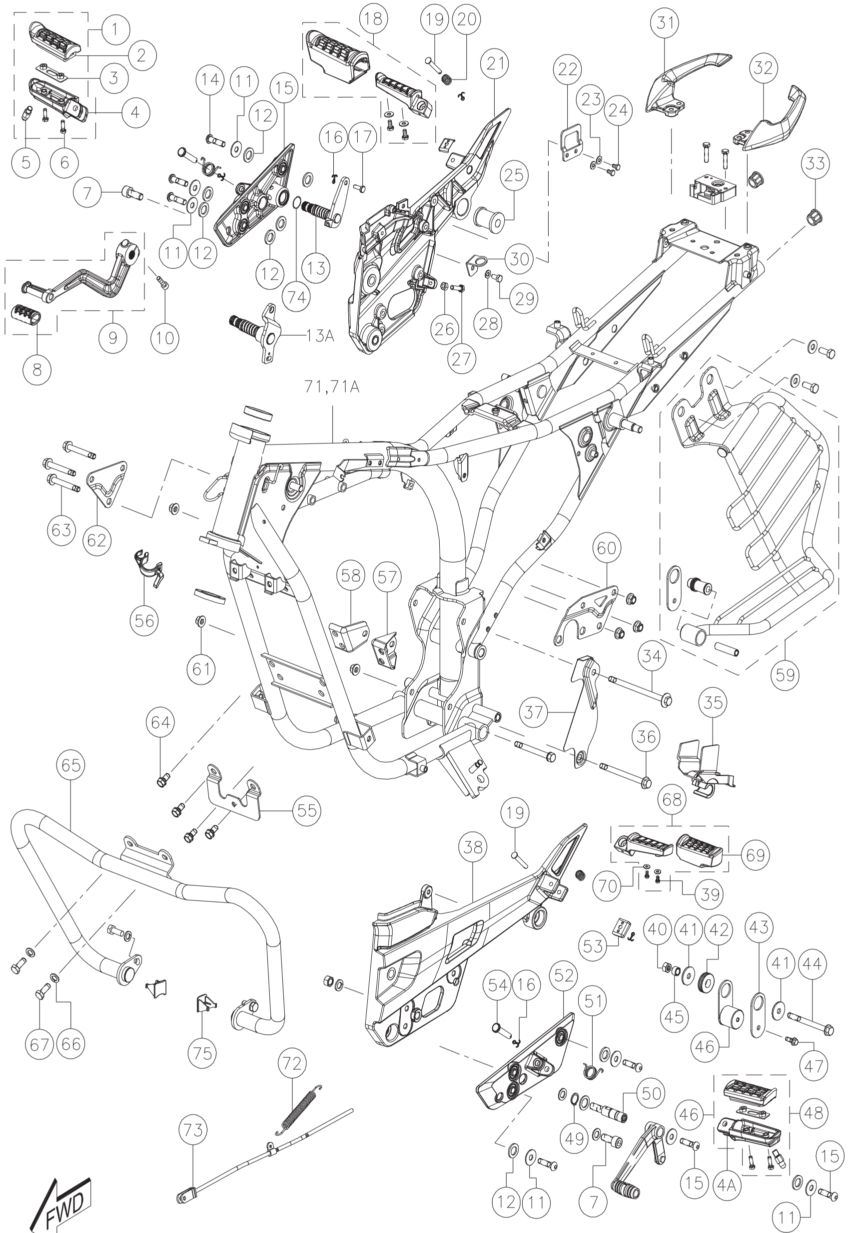

FRAME & SAREE GUARDASSEMBLY

TVS

FIG. NO. 13

FRAME & SAREE GUARD ASSY.

REF. NO.	PART NO.	DESCRIPTION	NO. OFF APACHE RTR 160	NO. OFF APACHE RTR 160 HYPER EDGE	NO. OFF APACHE RTR 160 HYPER EDGE REFRESH	REMARKS
1	N9123920	RIDER FOOTPEG ASSY. RH	1	1	-	
2	N9124050	SLEEVE RIDER FOOTREST	2	2	-	
3	N9123990	CLAMP COMP. RIDER FOOTREST	2	2	-	
4	N9124040	RIDER FOOTPEG RH	1	1	-	
4A	N9124030	RIDER FOOTPEG LH	1	1	-	
5	N9124000	STUD RIDER FOOTREST	2	2	-	
6	420510700	HEX SCREW M5x16	4	4	-	
7	N9200250	HEX SOC HD CAP SCREW M10x25	2	2	-	
8	N9112000	SLEEVE BRAKE PEDAL	1	1	-	
9	N9112010	BRAKE PEDAL ASSY.	1	1	-	
10	N2200470	HEX SOC HD CAP SCREW M6x20	1	1	-	
11	N9200220	PUNCHED WASHER 8.5x24x1.6	6	6	-	
12	N9124450	RUBBER WASHER RIDER FOOTREST	12	12	-	
13	N9111980	SHAFT COMP. BRAKE PEDAL	1	1	-	
14	N9200230	SBHC SCREW M8x30	6	6	-	
15	N9124300	RIDER FOOTREST COMP. RH	1	1	-	
16	0330048	SPLIT PIN 2.0x20	5	5	-	
17	N2110600	PIN REAR BRAKE CONNECTOR	2	2	-	
18	N9125030	PILLION FOOT PEG ASSY. RH	1	1	-	
19	N9121790	PIN PILLION FOOTREST	2	2	-	
20	N9123980	SPRING FOOTREST	2	2	-	
21	N92210207D	PILLION FOOTREST RH	2	2	-	
22	N9220880	BRKT COVER LOCK	1	1	-	
23	0335558	PUNCHED WASHER 5.5x12x1	2	2	-	
24	C1200020	HEX SCREW	2	2	-	
25	N2121060	CUSHION EXHAUST MTG	1	1	-	

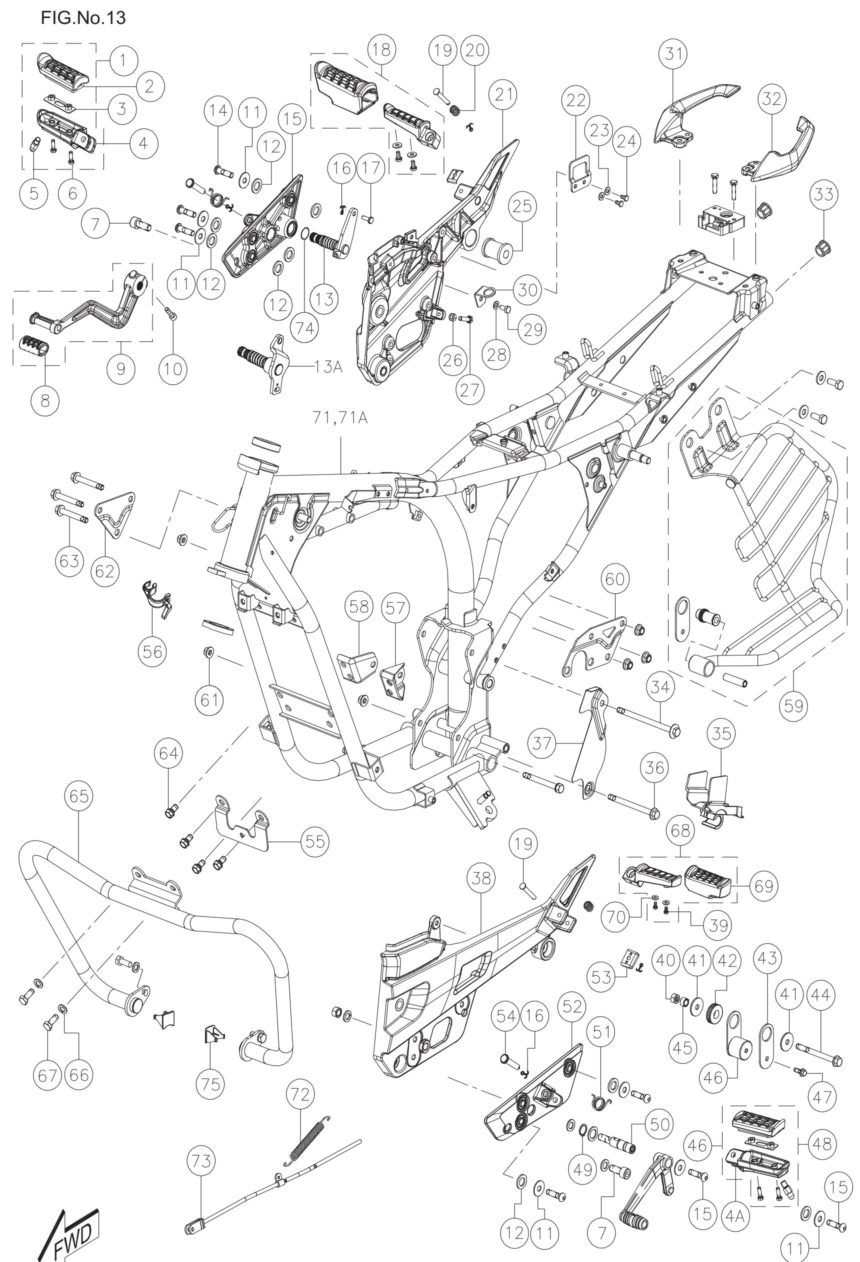

FRAME & SAREE GUARDASSEMBLY

FIG. NO. 13

FRAME & SAREE GUARD ASSY.

REF. NO.	PART NO.	DESCRIPTION	NO. OFF APACHE RTR 160	NO. OFF APACHE RTR 160 HYPER EDGE	NO. OFF APACHE RTR 160 HYPER EDGE REFRESH	REMARKS
26	420305700	HEX NUT M6	1	1	-	
27	420462700	HEX SCREW M6x20	1	1	-	
28	0330408	WAVE SPRING WASHER M6	1	1	-	
29	0331618	HEX SCREW M6x12	1	1	-	
30	N9112140	BRACKET BRAKE SWITCH	1	1	-	
31	N92210607D	PILLION HANDLE RH	1	1	-	
32	N92210507D	PILLION HANDLE LH	1	1	-	
33	N3120410	PLUG TUBE UPPER	2	2	-	
34	M1200120	HEX FLANGE BOLT M8x120	1	1	-	
35	N9091630	GUIDE DRIVE CHAIN	1	1	-	
36	M1200110	HEX FLANGE BOLT M8x95	1	1	-	
37	N9123760	DUST COVER CRANKCASE	1	1	-	
38	N92210107D	PILLION FOOTREST LH	1	1	-	
39	0331645	HEX SCREW M6x12	4	4	-	
40	0334548	HEX NUT M8	1	1	-	
41	3257598	WASHER	2	2	-	
42	N9125070	CUSHION	1	1	-	
43	N9125040	SIDE PLATE	1	1	-	
44	M3200060	HEX FL. BOLT M8x85	1	1	-	
45	N9125060	BUSH SAREE GUARD	1	1	-	
46	N9125050	BALANCER MASS COMP.	1	1	-	
47	N3200150	HEX SCREW	1	1	-	
48	N9123930	RIDER FOOTPEG ASSY. LH	1	1	-	
49	U6200030	CIRCLIP DIA 14	1	1	-	
50	N9221560	PIN GEAR SHIFT LEVER	1	1	-	

RTR160

FIG.No.13

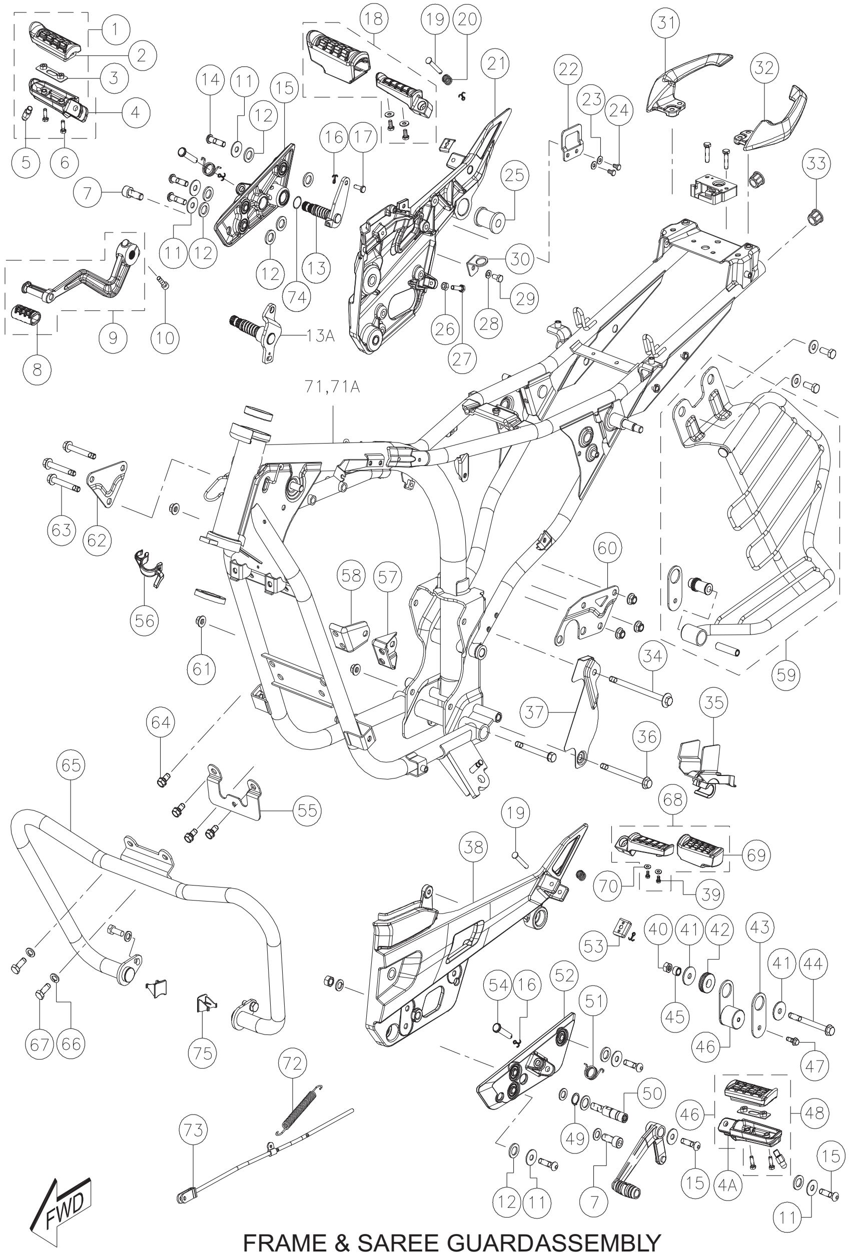

FRAME & SAREE GUARDASSEMBLY

TVS

FIG. NO. 13

FRAME & SAREE GUARD ASSY.

REF. NO.	PART NO.	DESCRIPTION	NO. OFF APACHE			REMARKS
			RTR 160	RTR 160 HYPER EDGE	RTR 160 HYPER EDGE REFRESH	
51	N9124020	TORSION SPRING FOOTPEG	2	2	-	
52	N9124200	RIDER FOOTREST COMP. LH	1	1	-	
53	N9123970	GUIDE PILLION FOOT PEG LH	2	2	-	
54	N9200310	CLEVIS PIN B8x42	2	2	-	
55	N9221440	BRKT COMP. GUARD CENTER	1	1	-	
56	N9200280	CABLE CLIP DIA 18	1	1	-	
57	N9124990	BRKT ENGINE MTG FRONT LH	1	1	-	
58	N9125000	BRKT ENGINE MTG FRONT RH	1	1	-	
59	N9221710	SAREE GUARD COMP.	1	1	-	
60	N9122990	BRKT ENGINE MTG. UPPER LH	1	1	-	
61	M1200890	HEX FLANGE NUT M8	6	6	-	
62	N9123000	BRKT ENGINE MTG. UPPER RH	1	1	-	
63	M7200070	HEX FLANGE BOLT M8x55	3	3	-	
64	0331058	HEX BOLT+SPRING WASHER M8x16	4	4	-	
65	N9221690	CRASH GUARD COMP.	1	1	-	
66	0330318	WAVE SPRING WASHER	4	4	-	
67	420454700	HEX SCREW M8x20	4	4	-	
68	N9125020	PILLION FOOT PEG ASSY. LH	1	1	-	
69	N9125010	SLEEVE PILLION FOOTREST	2	2	-	
70	0335605	PUNCHED WASHER 6.5x16x1.2	4	4	-	
71	N9124380	FRAME COMP. - RTR	1	1	-	
72	N2110700	BRAKE RETURN SPRING	1	1	-	
73	N9111680	ROD COMP. REAR BRAKE	1	1	-	
74	N9200300	O RING BRAKE PEDAL	1	1	-	
75	N9123750	COVER BRACKET CRASH GUARD	2	2	-	

FIG.No.13A

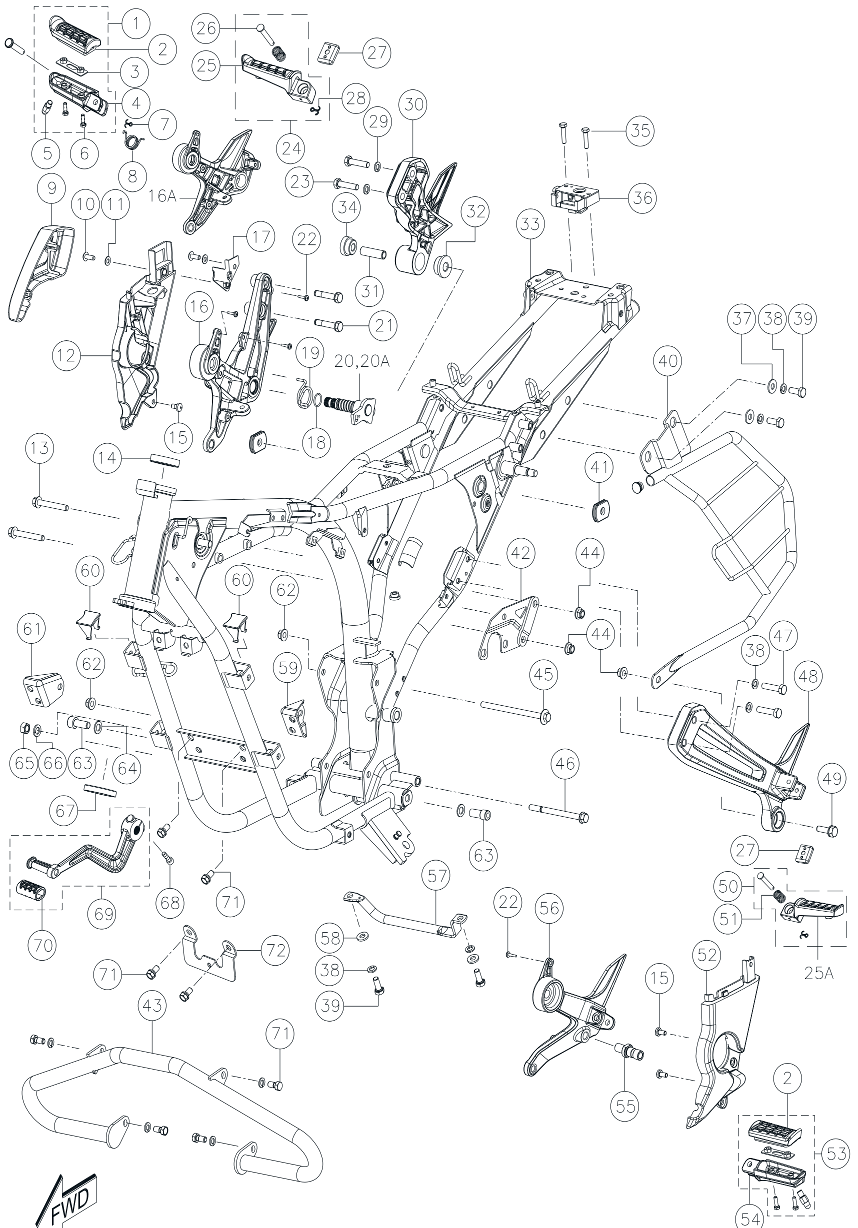

FRAME & SAREE GUARD ASSEMBLY (NEW)

FIG. NO. 13A

FRAME & SAREE GUARD ASSY. (NEW)

REF. NO.	PART NO.	DESCRIPTION	NO. OFF APACHE RTR 160	NO. OFF APACHE RTR 160 HYPER EDGE	NO. OFF APACHE RTR 160 HYPER EDGE REFRESH	REMARKS
1	N9123920	RIDER FOOTPEG ASSY. RH	-	-	1	
2	N9124050	SLEEVE RIDER FOOTREST	-	-	2	
3	N9123990	CLAMP COMP.RIDER FOOTREST	-	-	2	
4	N9124050	RIDER FOOTPEG RH	-	-	1	
5	N9124000	STUD RIDER FOOTREST	-	-	2	
6	420510700	HEX SCREW M5x16	-	-	4	
7	420510700	SPLIT PIN 2.0x20	-	-	2	
8	N9123980	SPRING FOOTREST	-	-	2	
9	N9126160	COVER MASTER CYLINDER	-	-	1	
10	0332275	SCREW CRPH M6x16	-	-	2	
11	0335578	PUNCHED WASHER 6.5x13x1	-	-	1	
12	N9223080	COVER FRAME BOTTOM RH	-	-	1	
13	M7200070	HEX FLANGE BOLT M8x55	-	-	2	
14	S1125290	RACE STEERING INNER	-	-	1	
15	P3200010	CRPH SCREW M6x12	-	-	4	
16	N9126060	RIDER FOOTREST DRUM RH	-	-	1	DRUM
16A	N9125980	RIDER FOOTREST DISC RH	-	-	1	DISC
17	N9223950	BRKT COVER FRAME HEAD	-	-	1	
18	N9200300	O RING PEDAL BRAKE	-	-	1	
19	N9111870	BRAKE RETURN SPRING	-	-	1	
20	N9111980	SHAFT COMP BRAKE PEDAL	-	-	1	DRUM
20A	N9111840	SHAFT COMP BRAKE PEDAL	-	-	1	DISC
21	420955700	HEX SCREW M8x40	-	-	1	
22	K200320	CRR PAN HD TAP SCR 4.2x16	-	-	4	
23	S1101250	HEX BOLT M8x35	-	-	2	

FIG.No.13A

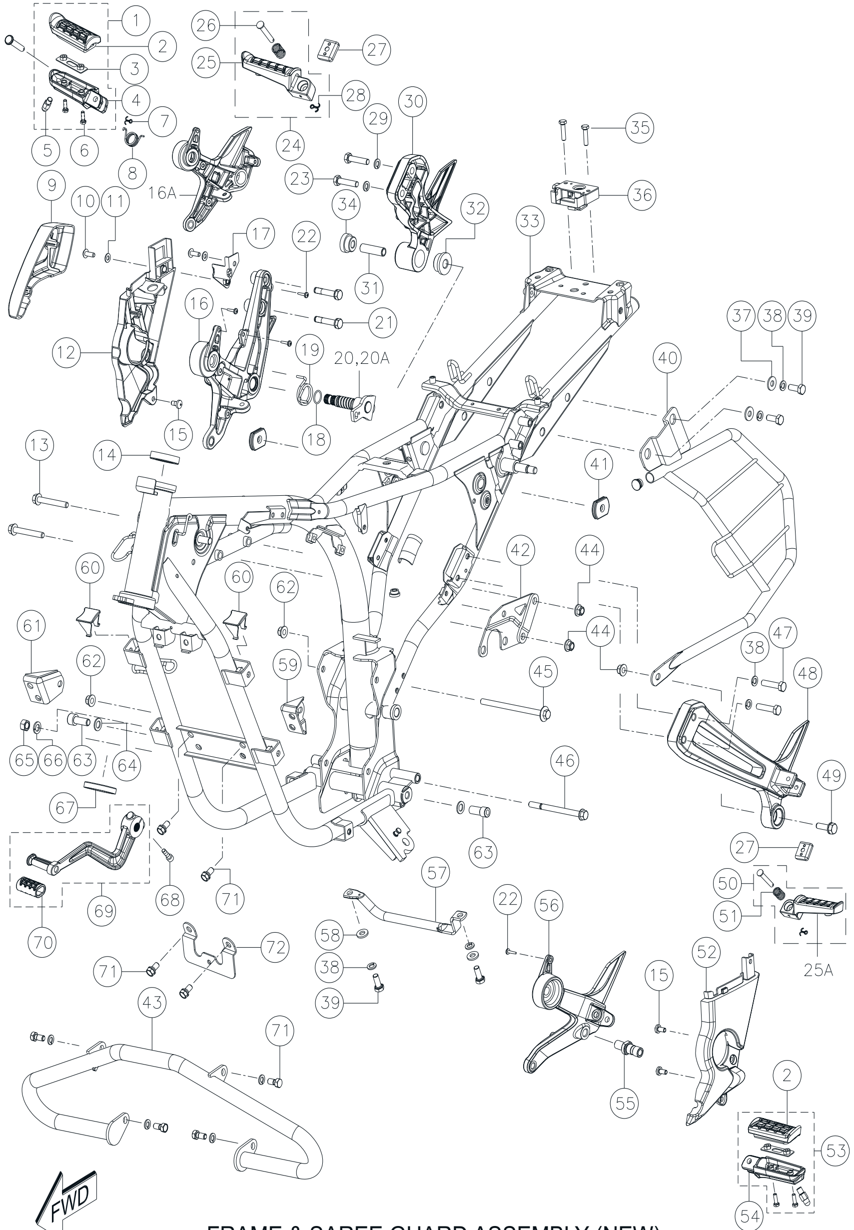

FRAME & SAREE GUARD ASSEMBLY (NEW)

FIG. NO. 13A

FRAME & SAREE GUARD ASSY. (NEW)

REF. NO.	PART NO.	DESCRIPTION	NO. OFF APACHE RTR 160	NO. OFF APACHE RTR 160 HYPER EDGE	NO. OFF APACHE RTR 160 HYPER EDGE REFRESH	REMARKS
24	-----	PILLION FOOT PEG ASSY. RH	-	-	1	
25	N9123940	PILLION FOOT PEG RH	-	-	1	
25A	N9123950	PILLION FOOT PEG LH	-	-	1	
26	N9121790	PIN PILLION FOOTREST	-	-	1	
27	N9123970	GUIDE PILLION FOOT PEG	-	-	2	
28	0330048	SPLIT PIN 2x20	-	-	1	
29	0330318	WAVE SPRING WASHER M8	-	-	4	
30	N9222850	PILLION FOOTREST RH	-	-	1	
31	N9125590	SPACER	-	-	1	
32	N9124890	CUSHION EXHAUST MTG SMALL	-	-	1	
33	N9125860	FRAME COMP. (DRUM & DISC)	-	-	1	
34	N9125580	CUSHION EXHAUST MTG BIG	-	-	1	
35	420463700	HEX SCREW M6x25	-	-	2	
36	N9123220	LATCH ASSY.	-	-	1	
37	0336018	PUNCHED WASHER 8.5x20x2	-	-	2	
38	0330318	SPRING WASHER	-	-	6	
39	420454700	HEX SCREW M8x20	-	-	4	
40	N9220800	SAREE GUARD COMP.	-	-	1	
41	K122810	CUSHION COVER FRAME	-	-	1	
42	N9122990	BRKT LH ENG. MTG UPPER	-	-	1	
43	N9223280	CRASH GUARD COMP	-	-	1	
44	M1200890	U NUT M8x1.2	-	-	3	
45	M1200120	HEX FLANGE BOLT M8x120	-	-	1	
46	N5200330	HEX FLANGE BOLT M8x100	-	-	1	
47	S1101250	HEX BOLT M8x35	-	-	2	
48	N9222840	PILLION FOOTREST LH	-	-	1	

FIG.No.13A

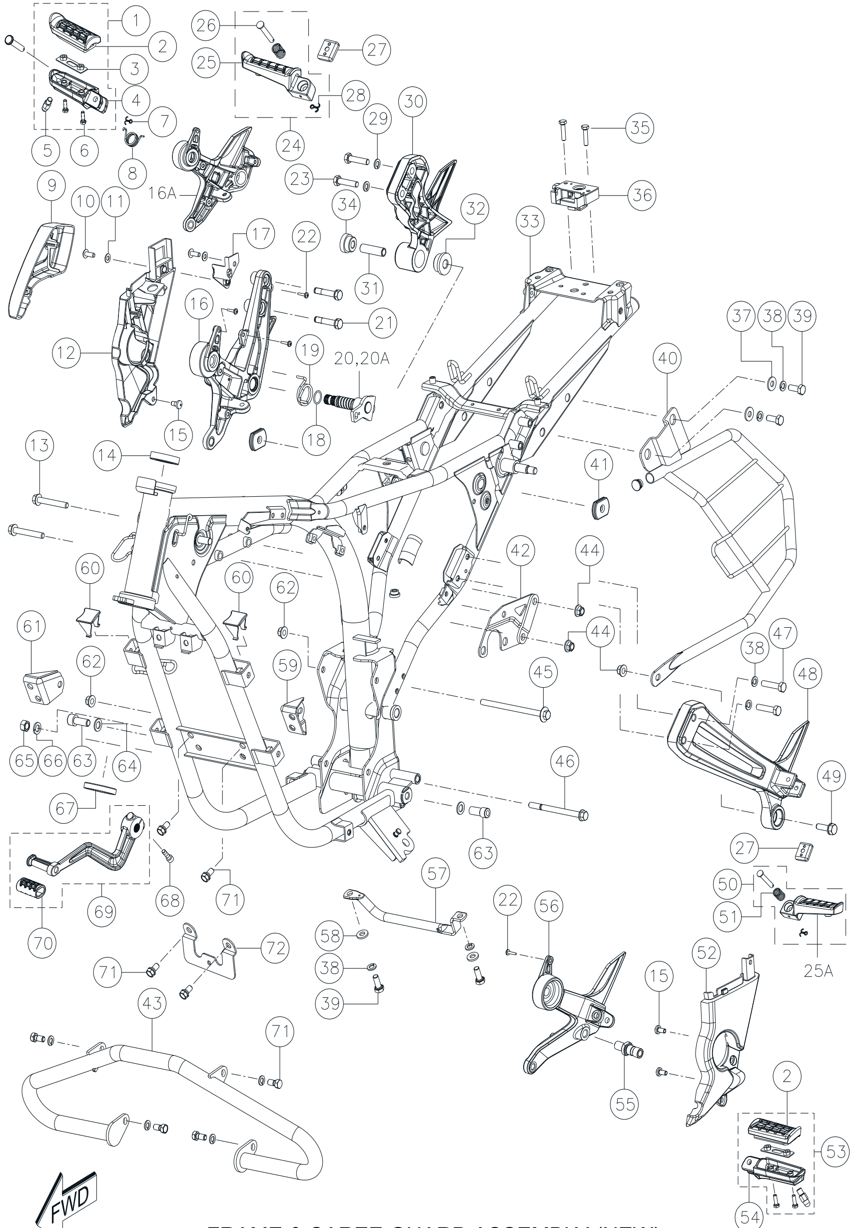

FRAME & SAREE GUARD ASSEMBLY (NEW)

FIG. NO. 13A

FRAME & SAREE GUARD ASSY. (NEW)

REF. NO.	PART NO.	DESCRIPTION	NO. OFF APACHE RTR 160	NO. OFF APACHE RTR 160 HYPER EDGE	NO. OFF APACHE RTR 160 HYPER EDGE REFRESH	REMARKS
49	M1200480	HEX FLANGE BOLT M8x25	-	-	3	
50	-----	PILLION FOOT PEG ASSY. LH	-	-	1	
51	N9123980	SPRING FOOTREST	-	-	2	
52	N9223070	COVER FRAME BOTTOM LH	-	-	1	
53	N9123930	RIDER FOOTREST ASSY. LH	-	-	1	
54	N9124030	RIDER FOOTPEG . LH	-	-	1	
55	N9125990	PIN GEARSHIFT LEVER	-	-	1	
56	N9125920	RIDER FOOTREST LH MTG	-	-	1	
57	N9126170	CONNECTOR FOOTREST	-	-	1	
58	M1200060	PUNCHED WASHER	-	-	2	
59	N9124990	BRKT ENG. MTG FRONT LH	-	-	1	
60	N9123750	COVER BRKT CRASH GUARD	-	-	4	
61	N9125000	BRKT ENG. MTG FRONT RH	-	-	1	
62	M1200890	U NUT M8x1.2	-	-	2	
63	N9200250	HEX SOC HD CAP SCR M10x25	-	-	2	
64	0335528	PUNCHED WASHER	-	-	2	
65	0334038	HEX NUT M10	-	-	1	
66	0330328	WAVE SPRING WASHER M10	-	-	1	
67	K3100590	CUP BOTTOM	-	-	1	
68	N2200470	HEX SOC HD CAP SCREW M6x20	-	-	1	
69	N9112010	BRAKE PEDAL ASSY.	-	-	1	
70	N9112000	SLEEVE BRAKE PEDAL	-	-	1	
71	0331058	HEX BOLT +SPRING WAS M8x16	-	-	6	
72	N9221440	BRKT COMP. GUARD CENTER	-	-	1	

FIG.No.14

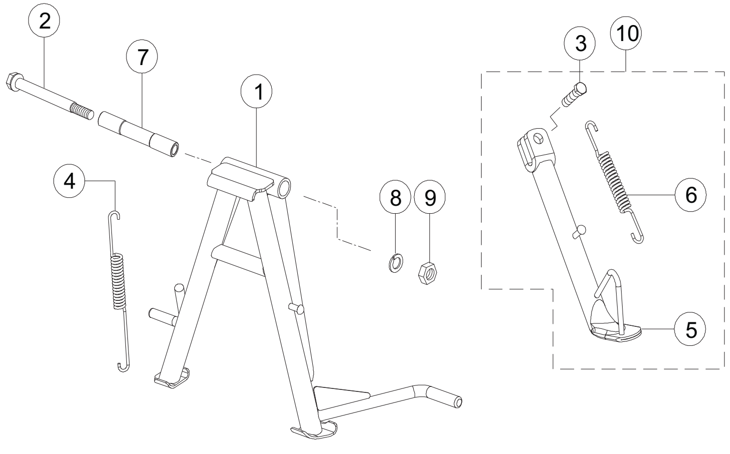

CENTER STAND & FOOTRESTASSEMBLY

FIG. NO. 14

CENTER STAND & FOOTREST ASSY.

REF. NO.	PART NO.	DESCRIPTION	NO. OFF APACHE RTR 160			REMARKS
			RTR 160	RTR 160 HYPER EDGE	RTR 160 HYPER EDGE REFRESH	
1	N9124730	CENTER STAND COMP.	1	1	1	
2	N8200050	BOLT CENTER STAND	1	1	1	
3	N9200210	BOLT	1	1	1	
4	N3120860	SPRING CENTER STAND	1	1	1	
5	N9124640	PROP STAND COMP.	1	1	1	
6	N5121610	SPRING PROP STAND	1	1	1	
7	N3121540	SPACER CENTER STAND	1	1	1	
8	0330328	WAVE SPRING WASHER	1	1	1	
9	0334038	HEX NUT M10x1.25	1	1	1	
10	N9321940	PROP STAND KIT	1	1	1	**

**- REF. KIT & KIT CONTENTS

FIG.No.15

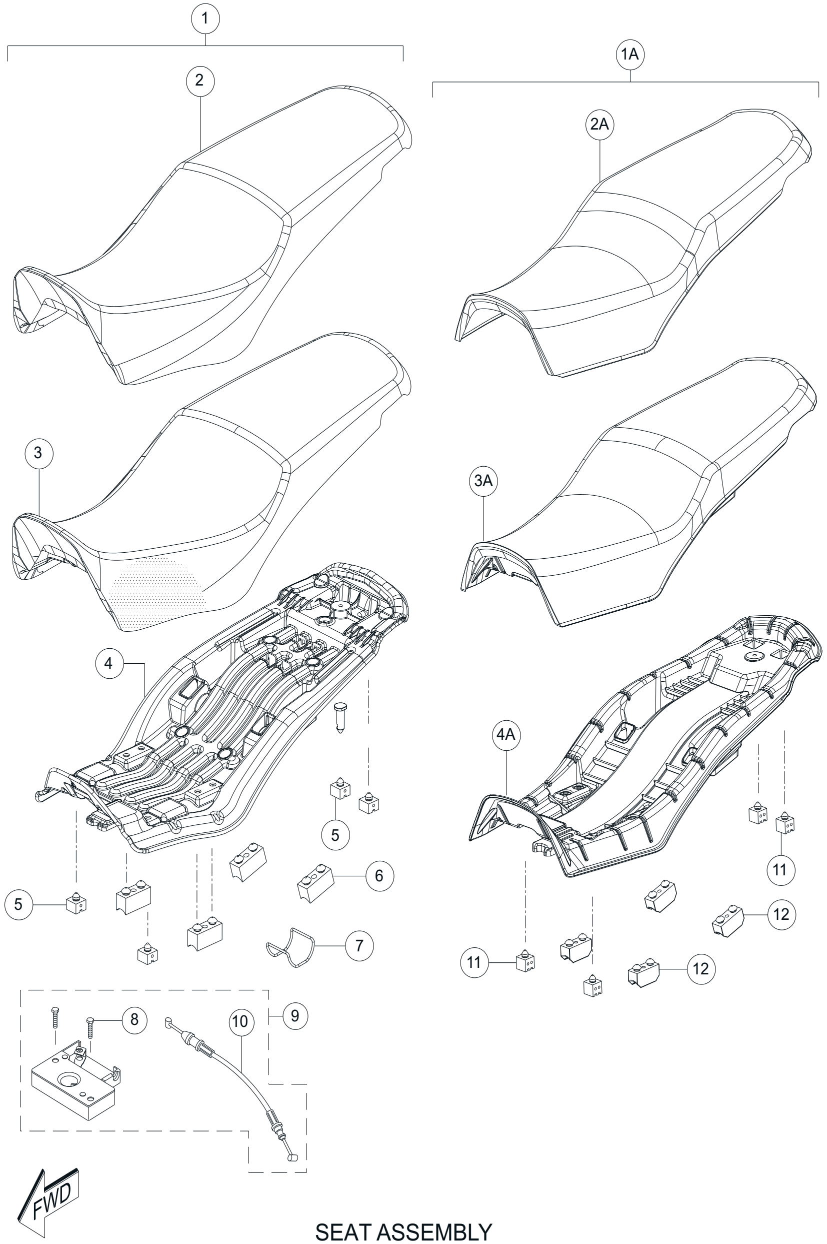

SEAT ASSEMBLY

FIG. NO. 15

SEAT ASSEMBLY

REF. NO.	PART NO.	DESCRIPTION	NO. OFF APACHE RTR 160	NO. OFF APACHE RTR 160 HYPER EDGE	NO. OFF APACHE RTR 160 HYPER EDGE REFRESH	REMARKS
1	N9130060	SEAT ASSEMBLY	1	1	-	
1A	N9130150	SEAT ASSEMBLY	-	-	1	
2	N9130090	COVER COMP SEAT	1	1	-	
2A	N9130180	COVER COMP SEAT	-	-	1	
3	N9130080	SEAT FOAM	1	1	-	
3A	N9130170	SEAT FOAM	-	-	1	
4	N9130070	SEAT BASE	1	1	-	
4A	N9130160	SEAT BASE	-	-	1	
5	M1130240	CUSHION SEAT	4	4	4	
6	N8130130	CUSHION, SEAT	4	4	4	
7	K210800	O RING FIRST AID	1	1	1	
8	K3122240	HEX BOLT M5x65	2	2	2	
9	N9123220	LATCH ASSY. SEAT	1	1	1	
10	N9170090	CABLE COMP. SEAT	1	1	1	
11	N9130120	CUSHION SEAT	-	-	4	
12	N8130240	CHSHION SEAT	-	-	4	

FIG.No.16

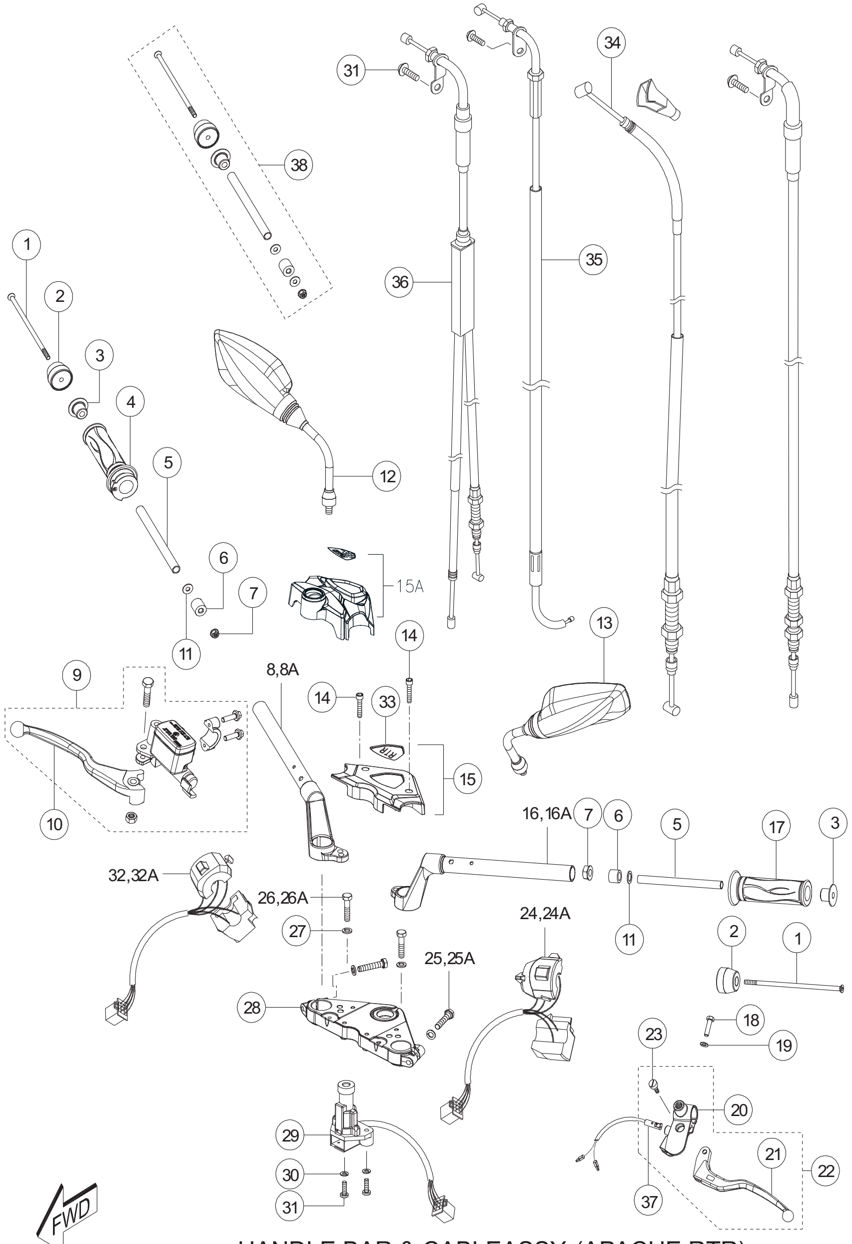

HANDLE BAR & CABLEASSY. (APACHE RTR)

FIG. NO. 16

HANDLE BAR & CABLE ASSY.

REF. NO.	PART NO.	DESCRIPTION	NO. OFF APACHE RTR 160	NO. OFF APACHE RTR 160 HYPER EDGE	NO. OFF APACHE RTR 160 HYPER EDGE REFRESH	REMARKS
1	N9200350	SCREW	2	2	2	
2	N9150770	DAMPER WEIGHT HANDLE BAR	2	2	2	
3	N9151200	SAPCER HANDLE BAR	2	2	2	
4	N9221170	GRIP COMP. THROTTLE	1	1	1	
5	N9151190	TUBE HANDLE BAR	2	2	2	
6	N9151210	BUSH HANDLE BAR	2	2	2	
7	M1200900	HEX FLANGE NUT M6x1	2	2	2	
8	N9150820	HANDLE BAR COMP. RH	1	1	-	
8A	N9151390	HANDLE BAR COMP. RH	-	-	1	
9	N91111403C	CYLINDER ASSY. FRONT MASTER	1	1	1	
10	N9322020	KIT LEVER RH	1	1	1	**
11	0335608	WASHER 6.5x16x1.2	2	2	2	
12	N9221460	MIRROR ASSY. RH	1	1	1	
13	N9221450	MIRROR ASSY. LH	1	1	1	
14	N9200150	HEX SOC. HEAD CAP SCR M6x30	2	2	2	
15	N9151250	COVER ASSY. UPPER BRKT	1	-	-	
15A	N9151660	COVER HANDLE BAR COMP.	-	1	-	
15B	N9151750	COVER HANDLE BAR COMP.	-	-	1	
16	N9150790	HANDLE BAR COMP. LH	1	1	-	
16A	N9151400	HANDLE BAR COMP. LH	-	-	1	
17	N9221070	GRIP COMP. LH	1	1	1	
18	7200120	HEX SCREW M6x25	1	1	1	
19	-----	SPRING WASHER	1	1	1	

**- REF. KIT & KIT CONTENTS

FIG.No.16

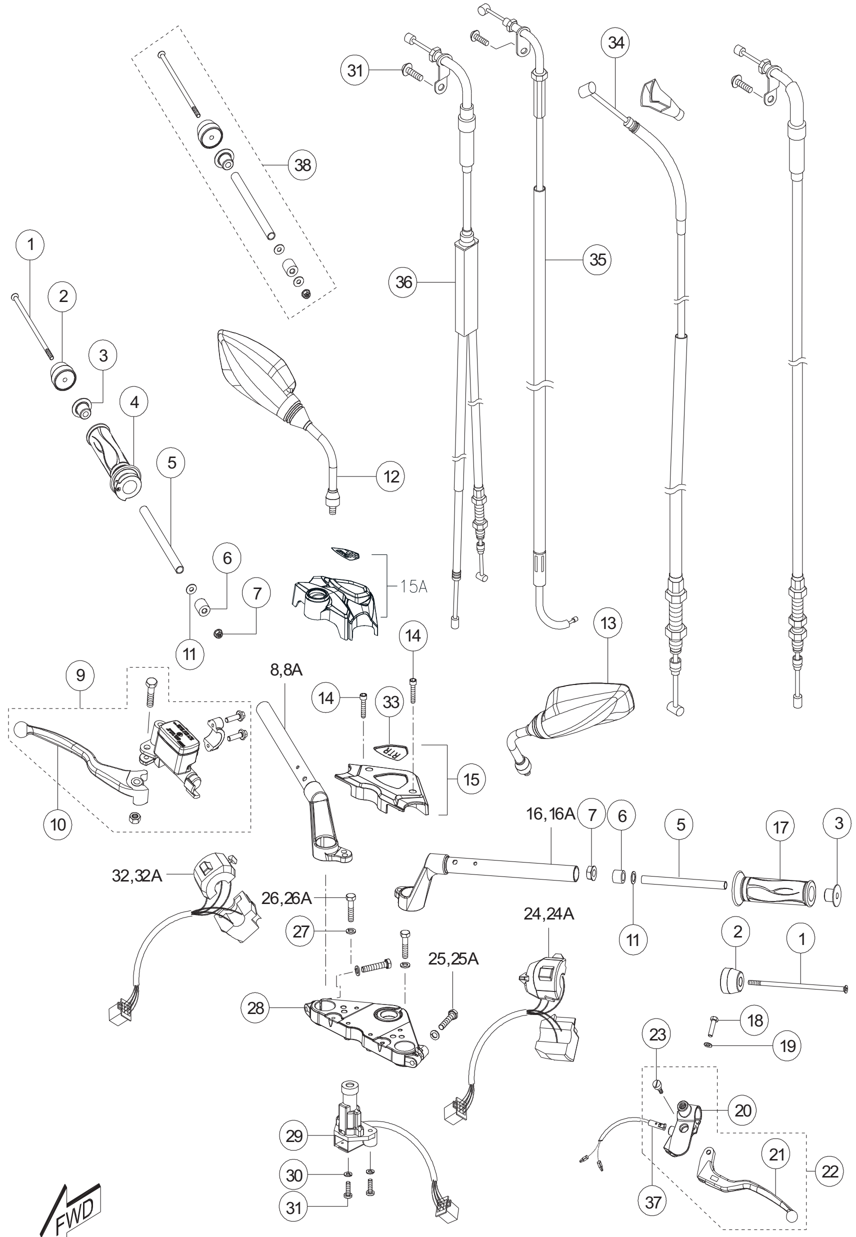

HANDLE BAR & CABLEASSY. (APACHE RTR)

FIG. NO. 16

HANDLE BAR & CABLE ASSY.

REF. NO.	PART NO.	DESCRIPTION	NO. OFF APACHE RTR 160	NO. OFF APACHE RTR 160 HYPER EDGE	NO. OFF APACHE RTR 160 HYPER EDGE REFRESH	REMARKS
20	N9150450	BRKT LEVER LH	1	1	1	
21	N91505203C	LEVER CLUTCH	1	1	1	
22	N91504403C	LEVER ASSY. CLUTCH	1	1	1	
23	N3150280	STUD LEVER HANDLE	1	1	1	
24	N9161200	SWITCH ASSY. HANDLE LH	1	1	-	
24A	N9161930	SWITCH ASSY. HANDLE LH	-	-	1	
25	420955700	HEX SCREW M8x40	2	-	-	
25A	M7200060	HEX SOC HD CAP SCREW M8x50	-	2	2	
26	N5200530	HEX BOLT M8x35	2	-	-	
26A	M7110280	HEX FLANGE BOLT M8x30	-	2	2	
27	0330408	WAVE SPRING WASHER M6	2	2	2	
28	N9101000	UPPER BRACKET	1	1	1	
29	N9160480	STEERING / IGNITION LOCK	1	1	1	
30	420518000	CRR PAN HEAD SCREW M6x20	2	2	2	
31	0330408	WAVE SPRING WASHER M6	2	2	2	
32	N9161150	SWITCH ASSY. HANDLE RH	1	-	-	
32A	N9161940	SWITCH ASSY. HANDLE RH	-	1	1	
33	N9213920	EMBLEM COVER HANDLE BAR	1	1	1	
34	N9170250	CLUTCH CABLE ASSY.	1	1	1	
35	N9170240	CHOKE CABLE ASSY.	1	1	1	
36	N9170230	THROTTLE CABLE ASSY.	1	1	1	
37	N9160910	CLUTCH SWITCH ASSY.	1	1	1	
38	N9151220	DAMPER ASSY. HANDLE BAR	2	2	2	

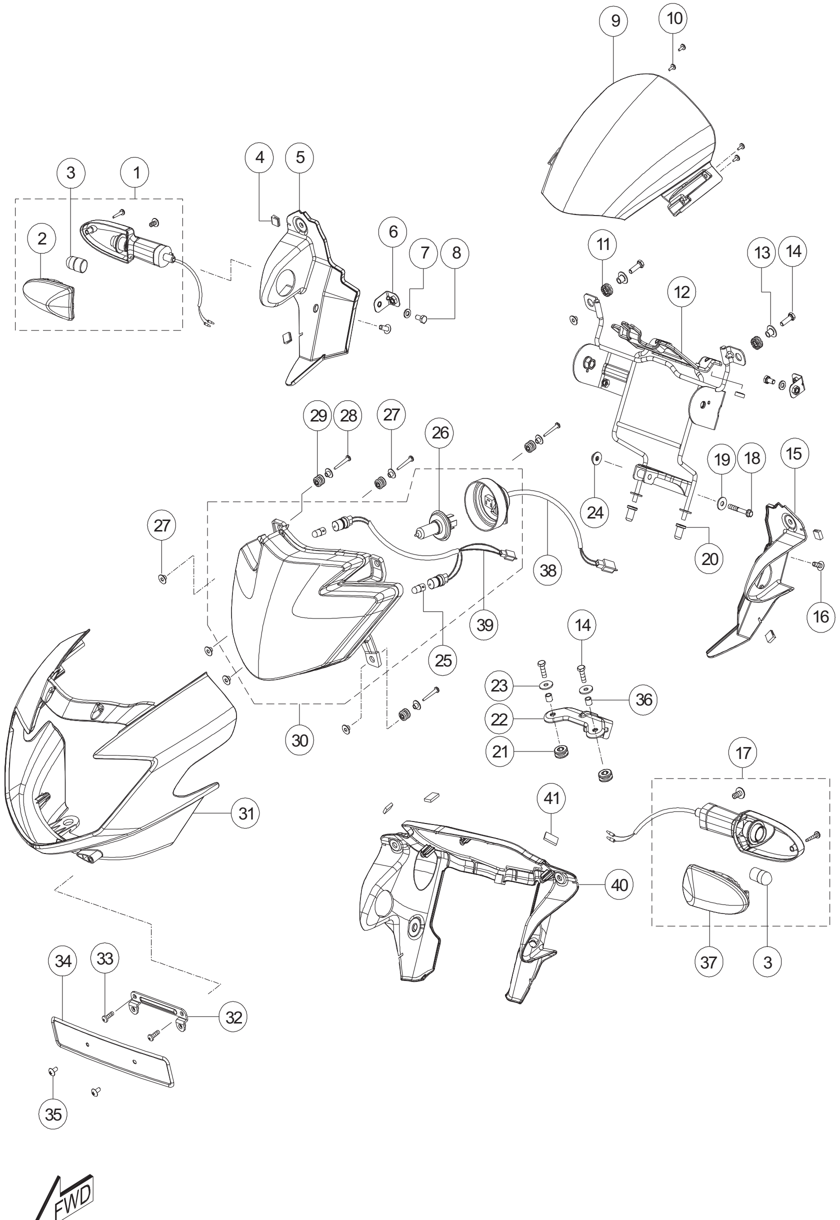

HEAD LAMP ASSY. & TSL LH, RH

FIG. NO. 17

HEAD LAMP ASSY. & TSL LH,RH

REF. NO.	PART NO.	DESCRIPTION	NO. OFF APACHE			REMARKS
			RTR 160	RTR 160 HYPER EDGE	RTR 160 HYPER EDGE REFRESH	
1	N9161370	TURN SIGNAL LAMP ASSY FR RH	1	1	-	
2	N9321830	LENS AND REFLECTOR COMP. FR/RL	1	1	-	
3	K3160450	AMBER BULB	2	2	-	
4	N3120600	GROMMET COVER	4	4	-	
5	N9220460	HOUSING HEADLAMP REAR RH	1	1	-	
6	M7121680	BRKT, COMP. HSG HD LAMP	1	1	-	
7	420001700	PUNCHED WASHER A6.6	1	1	-	
8	0331618	HEX SCREW M6 x 12	2	2	-	
9	N9220240	VISOR HOUSING HEAD LAMP	1	1	-	
10	K5200010	CRR PAN HD TAP SCR ST4.2x9.5	6	6	-	
11	N8220180	GROMMET TAIL COVER	2	2	-	
12	N9323840	BRKT COMP HEADLAMP HSG KIT	1	1	-	
13	N8122610	SPACER HEAD LAMP	2	2	-	
14	M1200610	HEX SCREW M6X 20	4	4	-	
15	N9220320	HOUSING HEADLAMP REAR LH	1	1	-	
16	0332275	CRR PAN HD SCREW M6x16	2	2	-	
17	N9161360	TURN SIGNAL LAMP ASSY FR LH	1	1	-	
18	M1200500	HEX FLANGE BOLT M6 X 40	1	1	-	
19	P1200100	PUNCHED WASHER 6.4X 18X 1.5	2	2	-	
20	N8220500	PLUG, BRKT HSG HEADLAMP	2	2	-	
21	N3120130	GROMMET, HEAD LAMP	2	2	-	
22	N9220370	BRKT COMP. HSG HL LOWER	1	1	-	

FIG.No.17

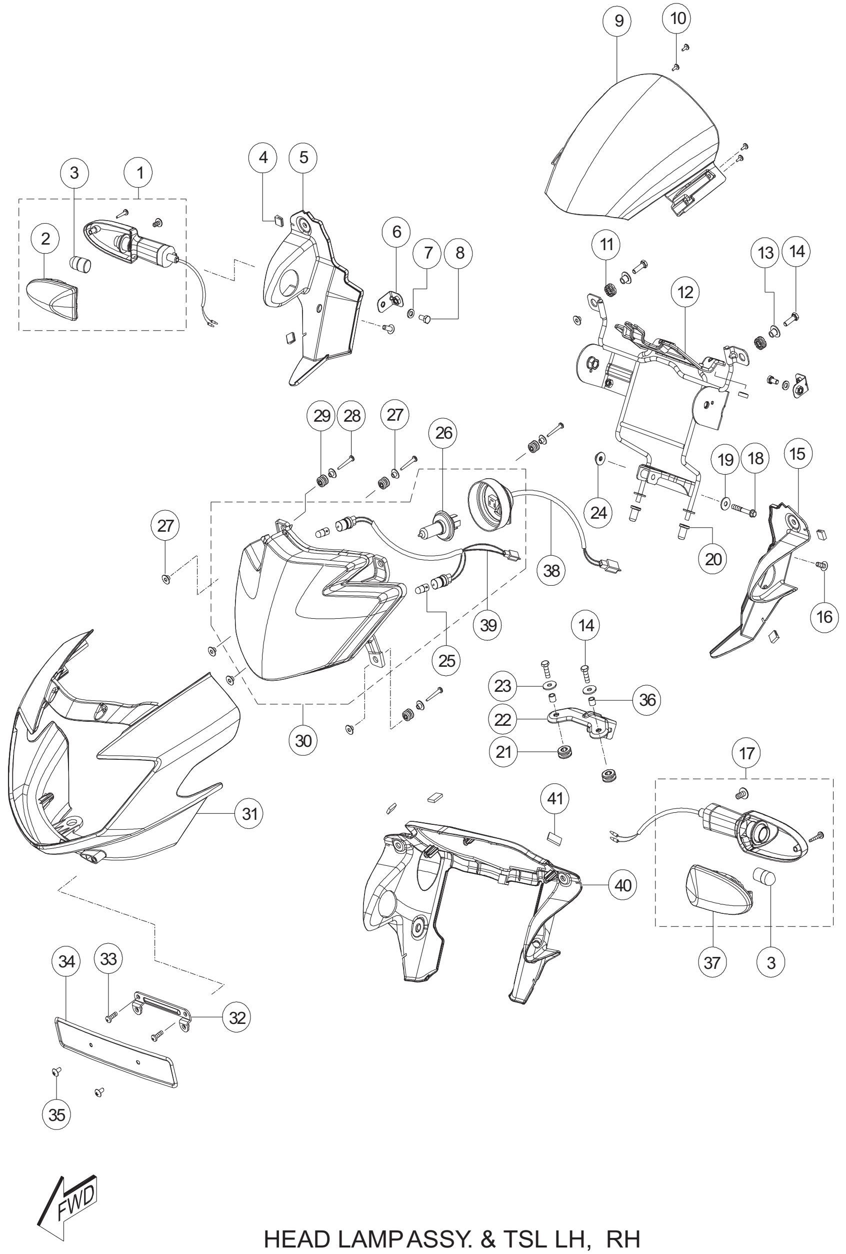

HEAD LAMP ASSY. & TSL LH, RH

FIG. NO. 17

HEAD LAMP ASSY. & TSL LH,RH

REF. NO.	PART NO.	DESCRIPTION	NO. OFF APACHE RTR 160	NO. OFF APACHE RTR 160 HYPER EDGE	NO. OFF APACHE RTR 160 HYPER EDGE REFRESH	REMARKS
23	0335618	PUNCHED WASHER	2	2	-	
24	P1200060	HEXAGONAL NUT M6	1	1	-	
25	K3160520	BULB CITY LAMP	2	2	-	
26	M7160190	BULB HEAD LAMP	1	1	-	
27	S1160200	SPACER HEAD LAMP	4	4	-	
28	K3200900	CRR PAN HEAD TAP SCR ST 4.2 X 30	4	4	-	
29	S1160190	CUSHION HEAD LAMP	4	4	-	
30	N9160390	HEADLAMP ASSY.	1	1	-	
31	-----	HOUSING HEAD LAMP FRONT	1	1	-	REF. COLOR PART PAGE
32	N8220510	BRKT LICENSE PLATE	1	1	-	
33	0331718	CRR PAN HEAD SCREW M5x16	2	2	-	
34	N3211120	LICENSE PLATE FRONT	1	1	-	
35	8200120	CRR FLANGED PAN HD SCREW M5x12	2	2	-	
36	N3120140	BUSH, TAIL COVER	2	2	-	
37	N9321820	LENS AND REFLECTOR COMP. FR/RR	1	1	-	
38	N9160890	CORD SET HEADLAMP	1	1	-	
39	N9160880	CORD SET POSITION LAMP	1	1	-	
40	N9221490	HOUSING HEAD LAMP REAR	1	1	-	
41	R1220770	CUSHION HEAD LAMP REAR	3	3	-	

FIG.No.17A

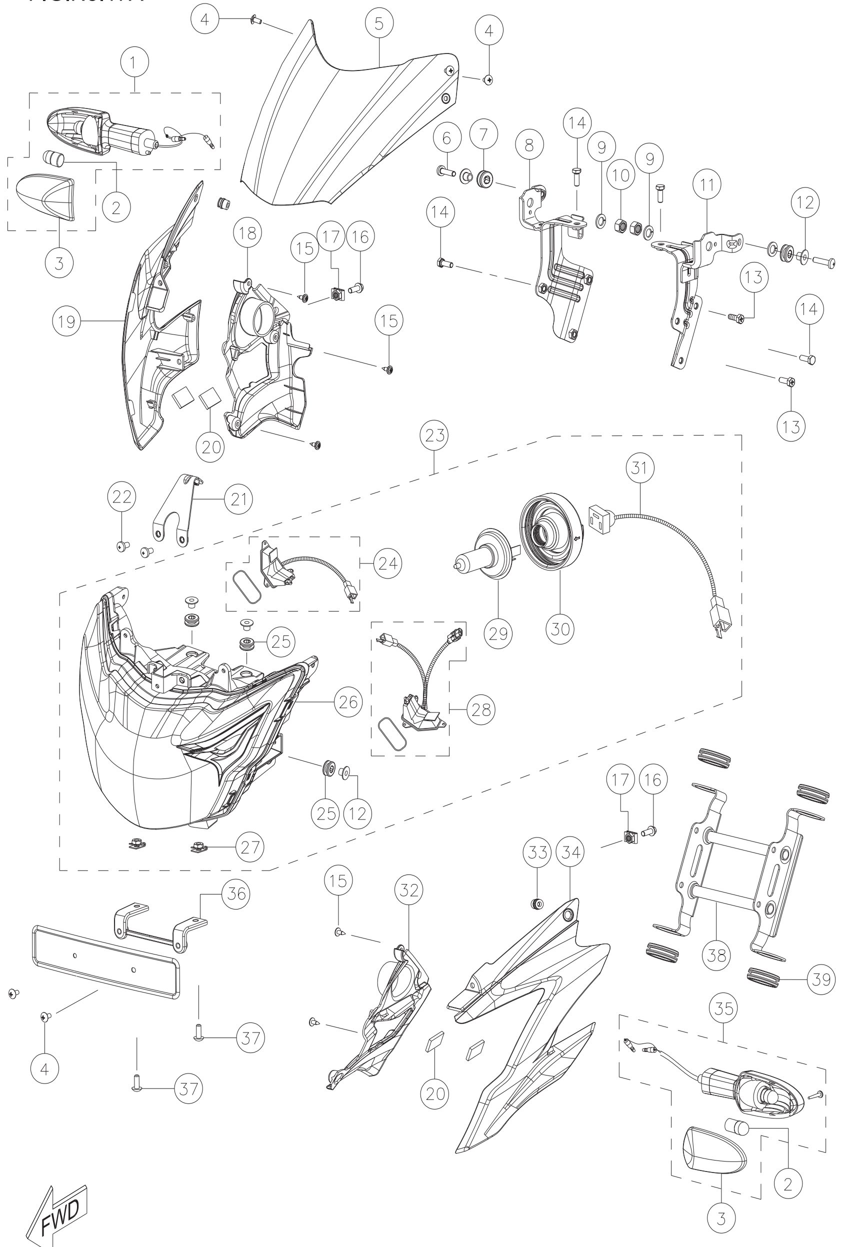

HEAD LAMP ASSY. WITH LED & TSL LH, RH

FIG. NO. 17A

HEAD LAMP ASSY. WITH LED & TSL LH,RH

REF. NO.	PART NO.	DESCRIPTION	NO. OFF APACHE RTR 160	NO. OFF APACHE RTR 160 HYPER EDGE	NO. OFF APACHE RTR 160 HYPER EDGE REFRESH	REMARKS
1	N9161370	TURN SIGNAL LAMP FRONT RH	-	-	1	
2	N9321830	LENS&REFLECTOR COMP. FR/RL	-	-	2	
3	K3160450	AMBER BULB	-	-	2	
4	N8200080	CRR PAN HEAD SCREW M5x10	-	-	4	
5	N9224840	VISOR HOUSING HEAD LAMP ASSY.	-	-	1	
6	M1200820	CRR PAN HEAD SCREW M6 x 25	-	-	2	
7	N5120820	GROMMET, HEAD LAMP	-	-	2	
8	N9223480	BRKT HEADLAMP COMP. LH	-	-	1	
9	0330328	WAVE SPRING WASHER M10	-	-	2	
10	0334038	HEX NUT M10	-	-	2	
11	N9223490	BRKT HEADLAMP COMP. RH	-	-	1	
12	N8122610	CUP WASHER	-	-	6	
13	N5200340	HEX SCREW M6x16	-	-	4	
14	420462700	HEX SCREW M6x20	-	-	4	
15	N3200340	CRR FL. PAN HD TAP SCREW 4.2x13	-	-	6	
16	N3200220	HEX FL. BOLT M6x1.25x16	-	-	2	
17	S1200700	RETAINER CLIP COMP. PANEL	-	-	2	
18	N9223360	HOUSING HEADLAMP FR INNER LH	-	-	1	
19	N9222809	HOUSING HEADLAMPFRONT LH	-	-	1	
20	N9200460	RECLOSABLE FASTENER	-	-	4	

RTR160

FIG.No.17A

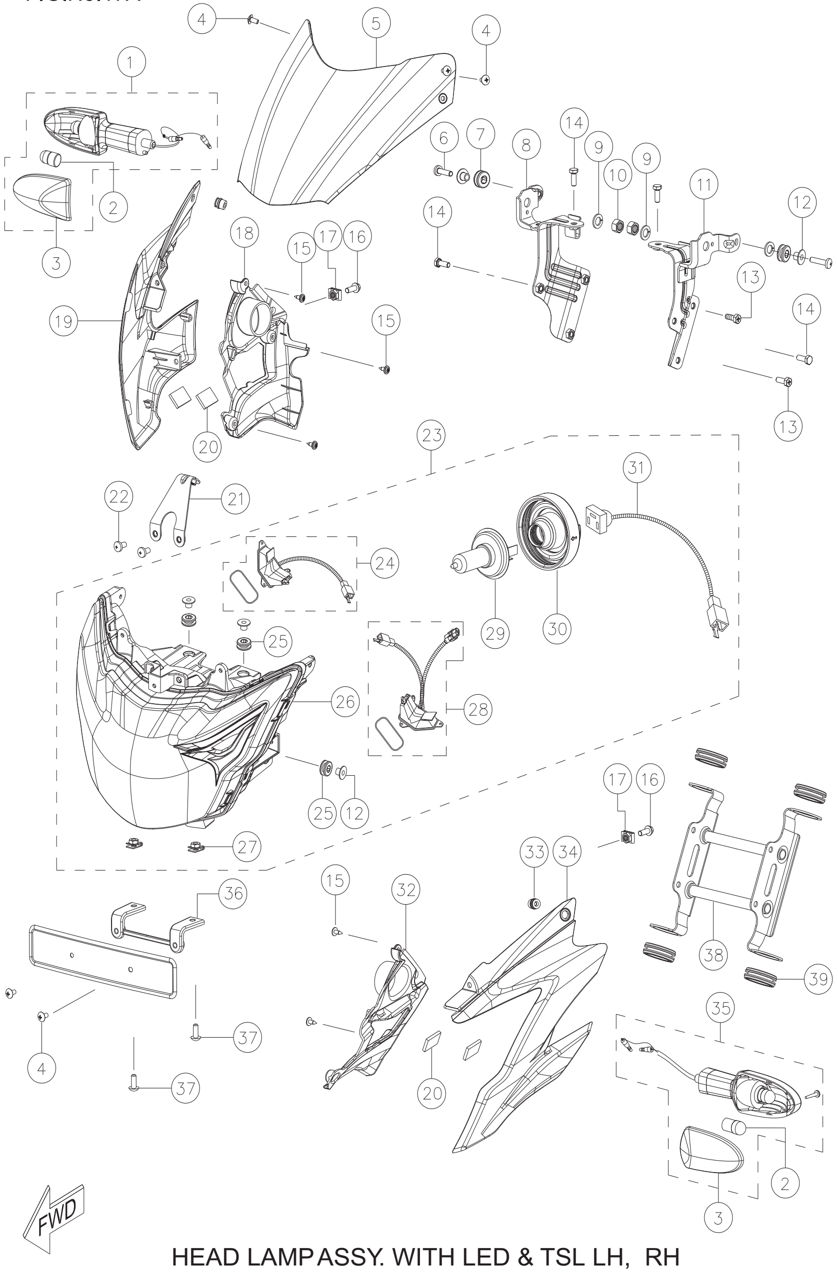

HEAD LAMP ASSY. WITH LED & TSL LH, RH

FIG. NO. 17A

HEAD LAMP ASSY. WITH LED & TSL LH,RH

REF. NO.	PART NO.	DESCRIPTION	NO. OFF APACHE			REMARKS
			RTR 160	RTR 160 HYPER EDGE	RTR 160 HYPER EDGE REFRESH	
21	N9223290	BRKT HEADLAMP COMP.	-	-	1	
22	P200270	CRPH SCREW M6x12	-	-	2	
23	N9222820	HEADLAMP ASSY.	-	-	1	
24	N9223540	COVER ASSY. RH 0.5W , 0.1W LED	-	-	1	
25	N5120820	GROMMET HEADLAMP	-	-	4	
26	N9324460	HEADLAMP (WITHOUT BULB)	-	-	1	
27	-----	RETAINER CLIP	-	-	2	
28	N9223530	COVER ASSY. LH 0.5W , 0.1W LED	-	-	1	
29	M7160190	BULB HEAD LAMP	-	-	1	
30	N5120820	GROMMET HEADLAMP	-	-	1	
31	N9162100	CARD SET HEADLAMP	-	-	1	
32	N9222839	HOUSING HEDLAMP FRONT LH	-	-	1	
33	N3120990	GROMMET COMP. VISOR MTG	-	-	2	
34	N9223350	HOUSING HEADLAMP FR. INNER LH	-	-	1	
35	N9161360	TURN SIGNAL LAMP FRONT LH	-	-	1	
36	N9223370	BRKT LICENSE PLATE	-	-	1	
37	0332275	CRR PAN HD SCREW M6x16	-	-	2	
38	N9222980	BRKT HOUSING HEAD LAMP	-	-	1	
39	7100380	PACKING	-	-	4	

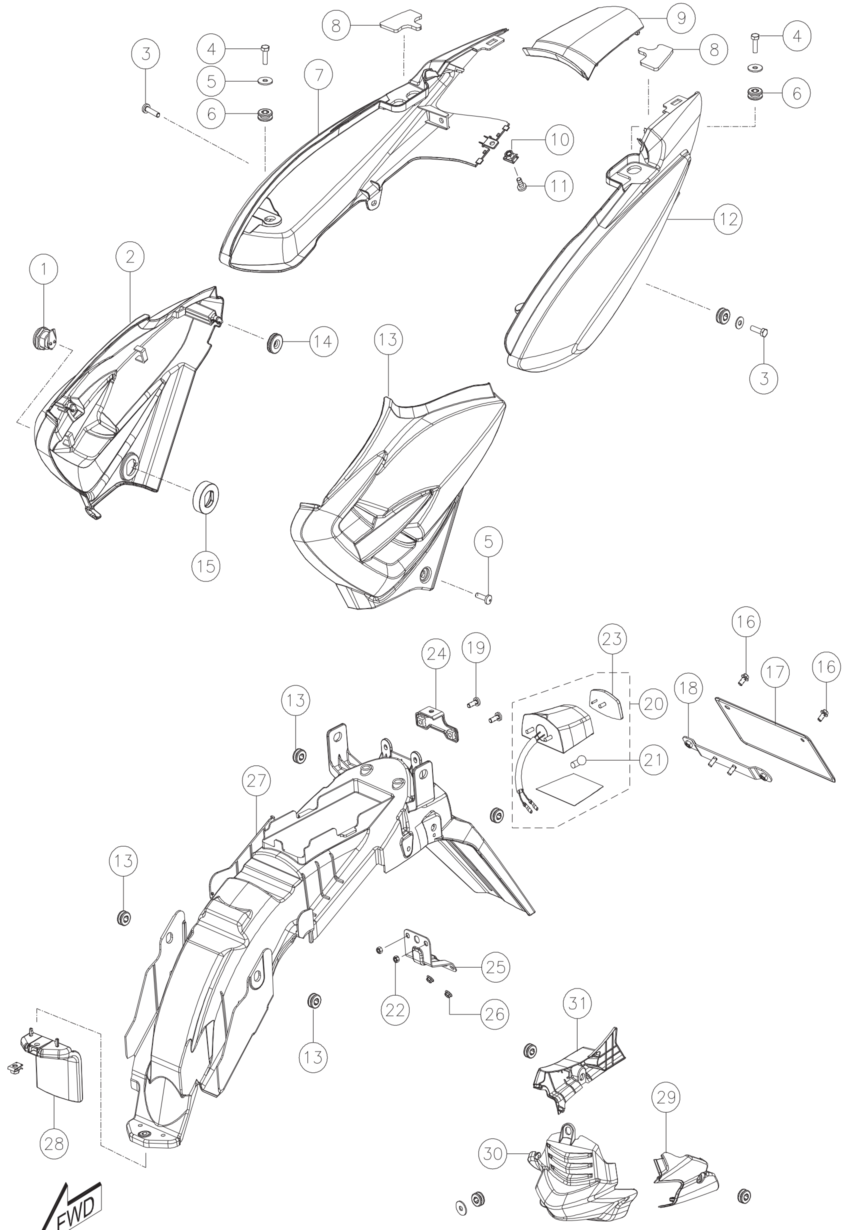

PANEL LH,RH & REAR FENDERASSY. (RTR)

FIG. NO. 18

PANEL LH,RH & REAR FENDER ASSY.

REF. NO.	PART NO.	DESCRIPTION	NO. OFF			REMARKS
			APACHE			
			RTR 160	RTR 160 HYPER EDGE	RTR 160 HYPER EDGE REFRESH	
1	N9212050	LOCK ASSY. COVER FRAME	1	1	-	
2	-----	COVER FRAME RH	1	1	-	REF. COLOR PART PAGE
3	M1200820	CRR PAN HEAD SCREW M6 X 25	2	2	-	
4	420462700	HEX SCREW	4	4	-	
5	0335618	PUNCHED WASHER 6.5x16x1.2	4	4	-	
6	N3120130	GROMMET	2	2	-	
7	-----	COVER SEAT TAIL RH	1	1	-	REF. COLOR PART PAGE
8	N9220560	CUSHION PILLION HANDLE	2	2	-	
9	-----	TAIL COVER CENTER	1	1	-	REF. COLOR PART PAGE
10	K3200840	RETAINER CLIP COMP. PANEL	4	4	-	
11	M1201050	CRR PAN HEAD SCREW	2	2	-	
12	-----	COVER SEAT TAIL LH	1	1	-	REF. COLOR PART PAGE
13	-----	COVER FRAME LH	1	1	-	REF. COLOR PART PAGE
14	N3130100	CUSHION COVER FRAME	2	2	-	
15	N9220530	CUSHION LOCK COVER FRAME	1	1	-	
16	C8200040	HEX FLANGE BOLT M6x1.0x12	2	2	-	
17	N8121710	LICENSE PLATE REAR	1	1	-	
18	N8220300	BRKT COMP.LICENSE PLATE RR	1	1	-	
19	0332275	CRR PAN HD SCREW M6x16	2	2	-	
20	N9221220	NUMBER PLATE ILLUMINATOR	1	1	-	
21	5227360	BULB 12V 3.4W	1	1	-	
22	420302700	HEX NUT M5	2	2	-	
23	-----	REFLEX REFLECTOR	1	1	-	
24	N9221260	BRKT FEDNER COMP. RR TOP	1	1	-	
25	N9221650	BRKT FENDER REAR BOTTOM	1	1	-	
26	0334146	HEX. FLANGE NUT M6	5	5	-	
27	N9221230	FENDER REAR	1	1	-	
28	N9220480	BODY FRONT FENDER REAR	1	1	-	
29	-----	ENGINE GUARD LH	1	1	-	REF. COLOR PART PAGE
30	-----	ENGINE GUARD CENTER	1	1	-	REF. COLOR PART PAGE
31	-----	ENGINE GUARD RH	1	1	-	REF. COLOR PART PAGE

FIG.No.18A

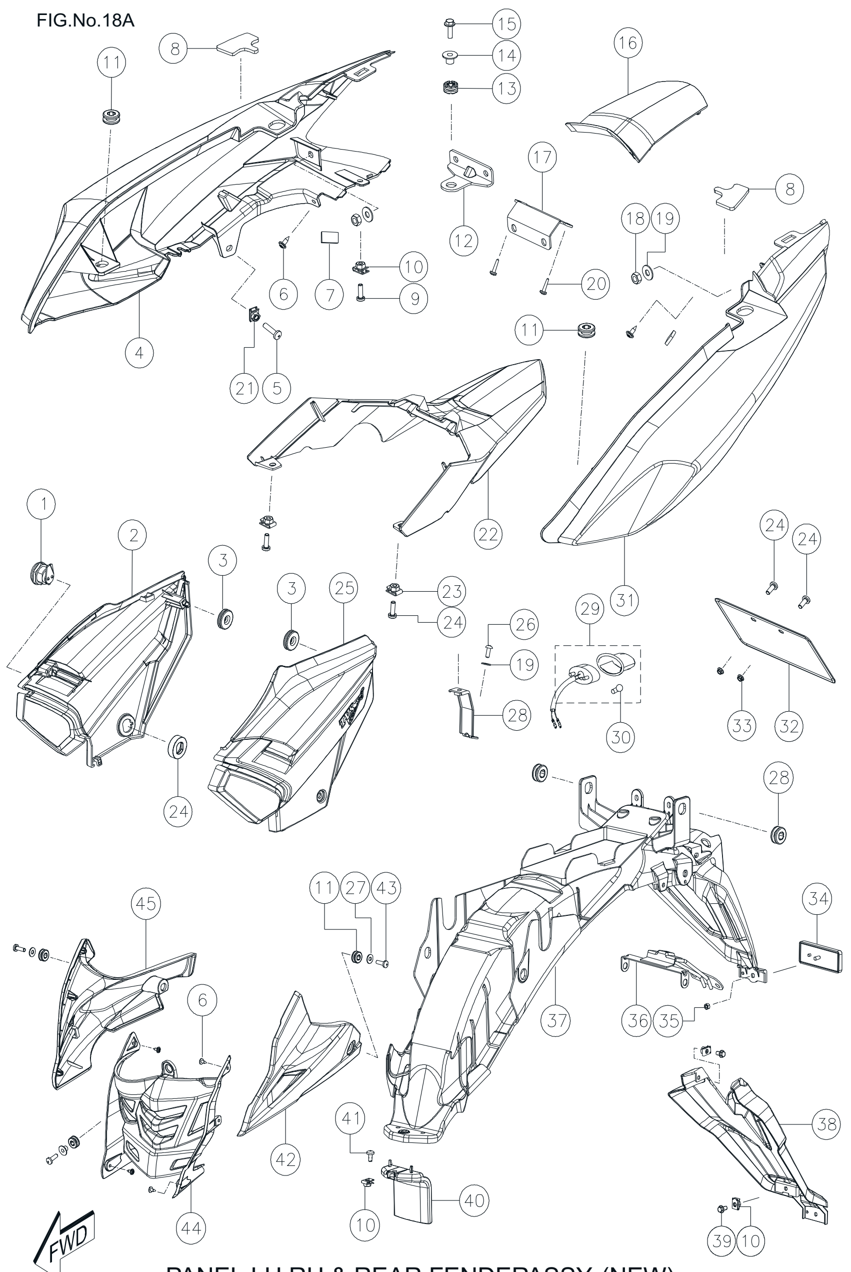

PANEL LH,RH & REAR FENDERASSY. (NEW)

FIG. NO. 18A

PANEL LH,RH & REAR FENDER ASSY.(NEW)

REF. NO.	PART NO.	DESCRIPTION	NO. OFF APACHE RTR 160	NO. OFF APACHE RTR 160 HYPER EDGE	NO. OFF APACHE RTR 160 HYPER EDGE REFRESH	REMARKS
1	N9212050	LOCK ASSY. COVER FRAME	-	-	1	
2	-----	COVER FRAME RH	-	-	1	REF. COLOR PART PAGE
3	N9220530	CUSHION LOCK COVER FRAME	-	-	2	
4	-----	TAIL COVER RH	-	-	1	REF. COLOR PART PAGE
5	M1200820	CRR PAN HEAD SCREW M6 x 25	-	-	2	
6	N3200340	CRR FL. PAN HEAD TAP. SCREW	-	-	6	
7	R1220770	CUSHION HEAD LAMP	-	-	2	
8	N9220560	CUSHION PILLION HANDLE	-	-	2	
9	M1201050	CRR PAN HEAD SCREW	-	-	1	
10	K3200840	RETAINER CLIP NUT M6	-	-	5	
11	N3120130	GROMMET HEAD LAMP	-	-	5	
12	N9220960	BRKT TAIL LAMP FRONT	-	-	1	
13	N8220180	GROMMET TAIL COVER	-	-	1	
14	N8122610	CUP WASHER	-	-	1	
15	N2200500	HEX FLANGE BOLT M6x1.25	-	-	1	
16	-----	TAIL COVER CENTER	-	-	1	REF. COLOR PART PAGE
17	N9220400	BRKT TAIL LAMP REAR	-	-	1	
18	420305700	HEX NUT M6	-	-	2	
19	0335608	PUNCHED WASHER 6.5x16x1.2	-	-	3	
20	K200320	CRR PAN HD TAP SCR4.2x16	-	-	2	
21	S1200700	RETAINER CLIP COMP PANEL	-	-	2	
22	N9222300	COVER ILLUMINATOR	-	-	1	

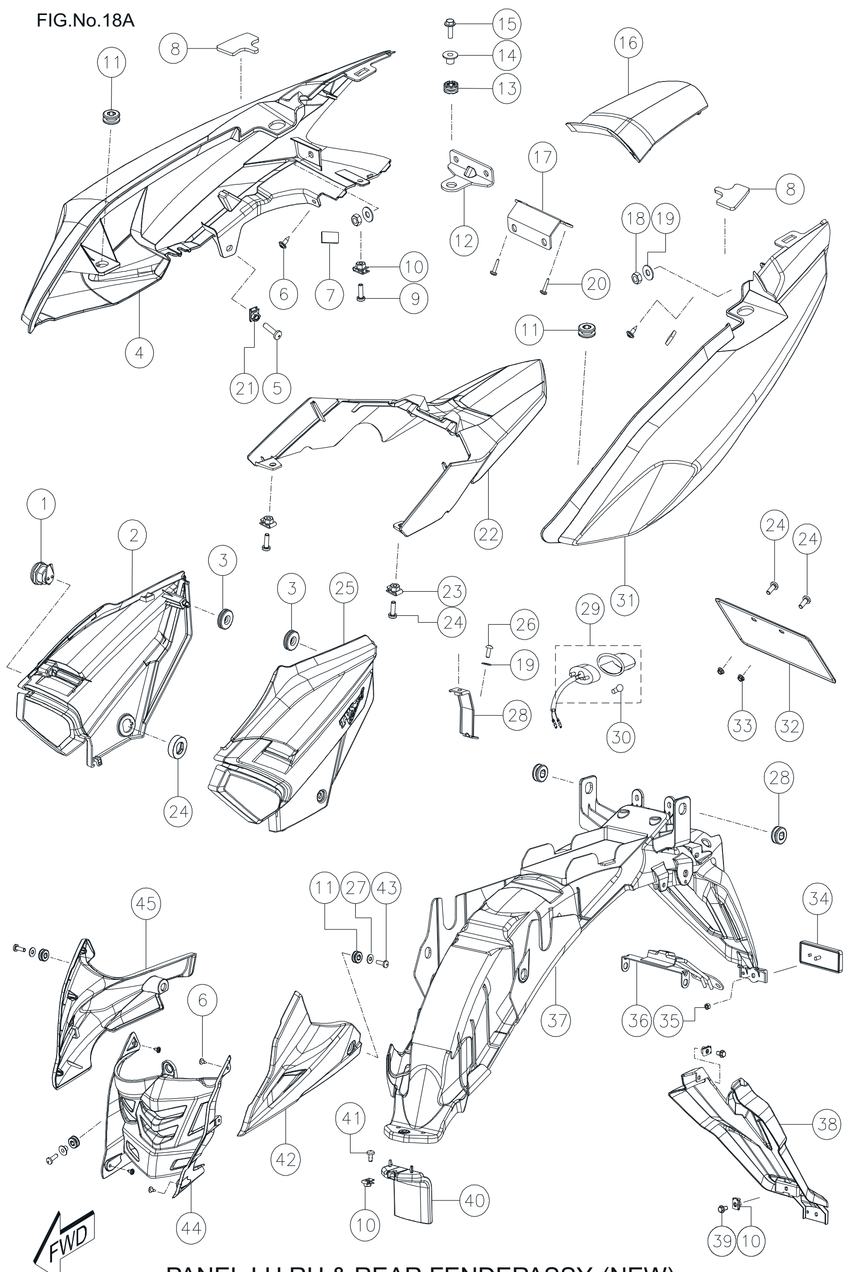

PANEL LH,RH & REAR FENDERASSY. (NEW)

TVS

FIG. NO. 18A

PANEL LH,RH & REAR FENDER ASSY.(NEW)

REF. NO.	PART NO.	DESCRIPTION	NO. OFF APACHE RTR 160	NO. OFF APACHE RTR 160 HYPER EDGE	NO. OFF APACHE RTR 160 HYPER EDGE REFRESH	REMARKS
23	K3200830	RETAINER CLIP NUT M5	-	-	2	
24	M1200660	CRR PAN HEAD SCREW M5x16	-	-	2	
25	-----	COVER FRAME LH	-	-	1	REF. COLOR PART PAGE
26	0335605	SCREW CRPH M6.5x16x1.2	-	-	3	
27	0335608	PUNCHED WASHER 6.5x16	-	-	1	
28	N9222080	BRKT FENDER TOP	-	-	1	
29	N9220490	NUMBER PLATE ILLUMINATOR COMP.	-	-	1	
30	M7160190	BULB 12V 3.4W	-	-	1	
31	-----	TAIL COVER LH	-	-	1	REF. COLOR PART PAGE
32	D127420	LICENSE PLATE REAR	-	-	1	
33	0334146	NUT LICENCE PLATE	-	-	1	
34	M7160120	REFLEX REFLECTOR ASSY.	-	-	1	
35	420305700	HEX NUT M5	-	-	1	
36	N9222040	BRKT COMP FENDER REAR	-	-	1	
37	N9223890	FENDER REAR	-	-	1	
38	N9222010	FLAP REAR FENDER	-	-	1	
39	C8200040	HEX FLANGE BOLT M6x12	-	-	3	
40	N9220480	BODY FRONT FENDER REAR	-	-	1	
41	P3200010	CRR PAN HD SCREW M6x12	-	-	1	
42	-----	ENGINE GUARD LH	-	-	1	REF. COLOR PART PAGE
43	M1200670	CRPH SCREW M6x20	-	-	3	
44	N9222779	ENGINE GUARD CENTER	-	-	1	
45	-----	ENGINE GUARD RH	-	-	1	REF. COLOR PART PAGE

FIG.No.19

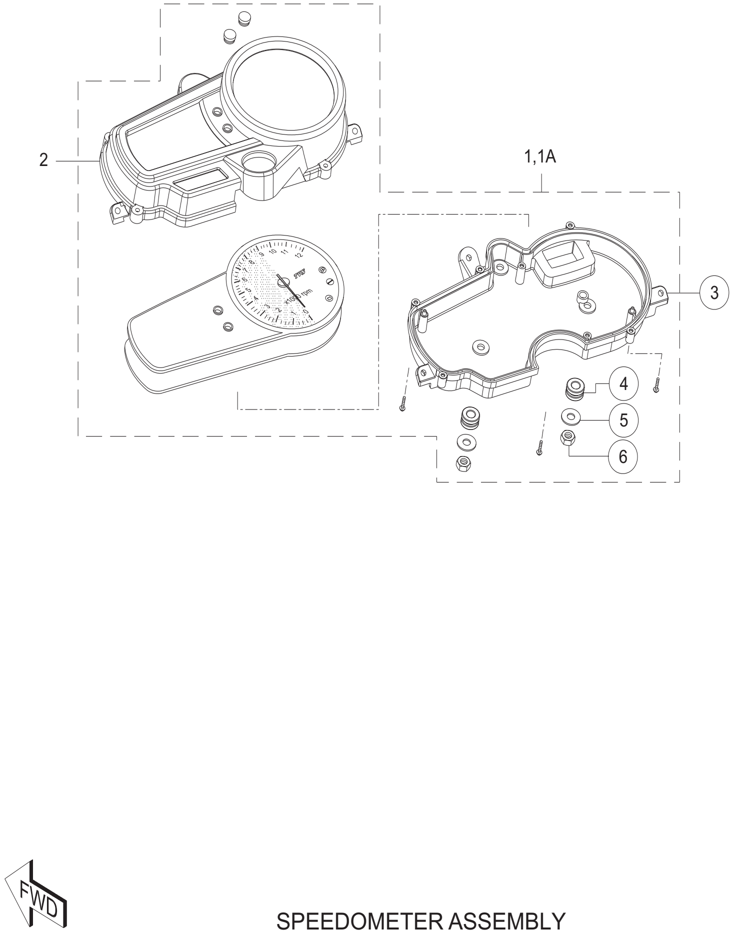

SPEEDOMETER ASSEMBLY

FIG. NO. 19

SPEEDOMETER ASSEMBLY

REF. NO.	PART NO.	DESCRIPTION	NO. OFF APACHE RTR 160	NO. OFF APACHE RTR 160 HYPER EDGE	NO. OFF APACHE RTR 160 HYPER EDGE REFRESH	REMARKS
1	N9221150	SPEEDOMETER ASSY. DIGITAL	1	1	1	
1A	N9222990	SPEEDOMETER ASSY. DIGITAL	-	-	1	
2	N9322040	COVER TOP SPEEDOMETER	1	1	1	
3	N9322050	COVER BOTTOM SPEEDOMETER	1	1	1	
4	N5120820	GROMMET HEADLAMP	1	1	1	
5	N8122610	CUP WASHER	2	2	2	
6	420305700	HEX NUT M6	3	3	3	

FIG.No.20

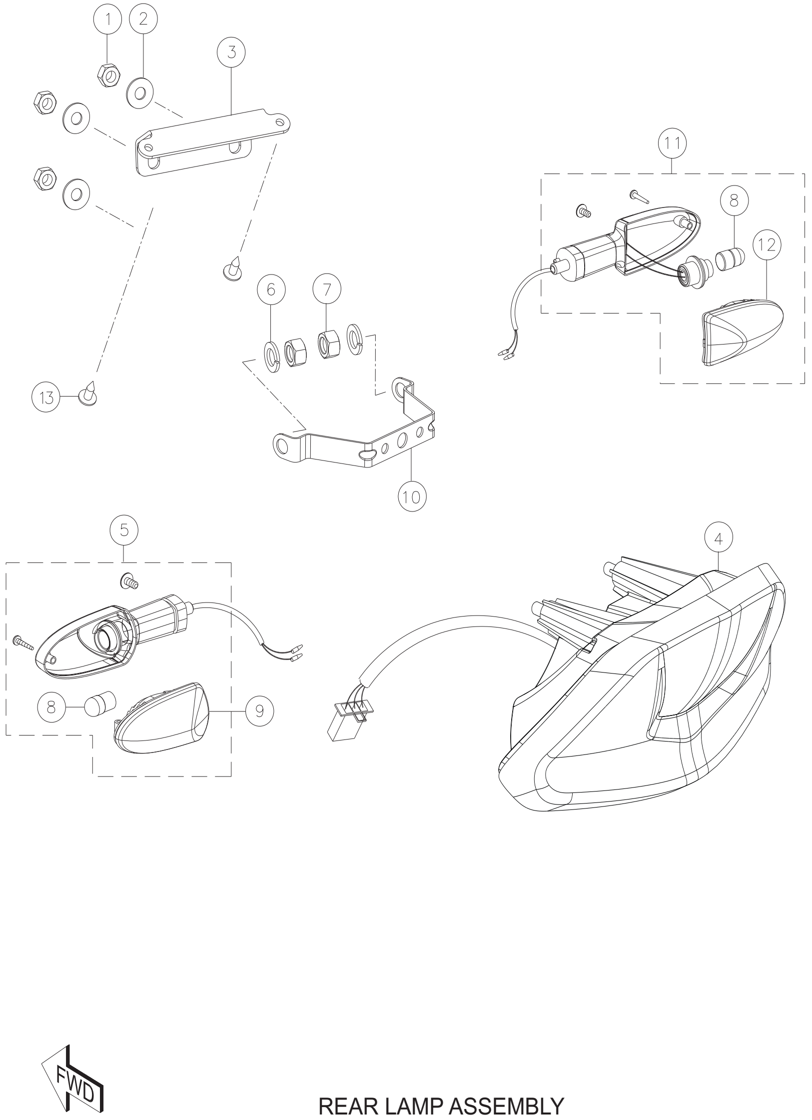

REAR LAMP ASSEMBLY

FIG. NO. 20

REAR LAMP ASSEMBLY

REF. NO.	PART NO.	DESCRIPTION	NO. OFF			REMARKS
			APACHE			
			RTR 160	RTR 160 HYPER EDGE	RTR 160 HYPER EDGE REFRESH	
1	P1200060	HEX NUT M6	2	2	2	
2	0335608	PUNCHED WASHER 6.5x16x1.2	4	4	4	
3	N9220400	BRACKET TAIL LAMP	1	1	1	
4	N9161080	TAIL LAMP ASSY. (LED)	1	1	1	
5	N9161380	TURN SIGNAL LAMP ASSY. REAR LH	1	1	1	
6	0330328	WAVE SPRING WASHER M10	2	2	2	
7	0334038	HEX NUT M10	2	2	2	
8	K3160450	AMBER BULB	2	2	2	
9	N9321830	LENS AND REFLECTOR COMP. RL/FR	1	1	1	
10	N9220960	BRKT FENDER REAR	1	1	1	
11	N9161390	TURN SIGNAL LAMP ASSY, REAR RH	1	1	1	
12	N9321820	LENS AND REFLECTOR COMP. RR/FL	1	1	1	
13	K200320	SCREW SELF TAPPING 4.2x16	2	2	2	

FIG.No.21

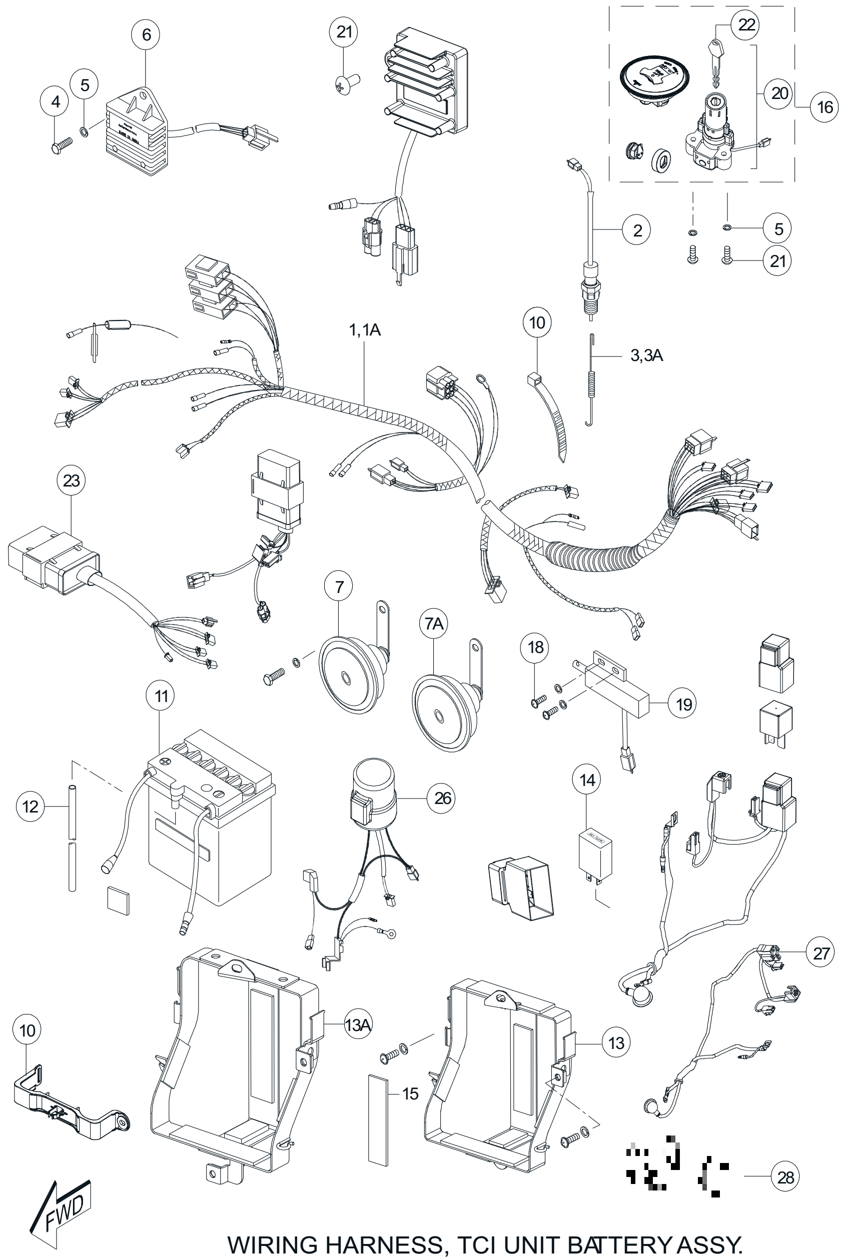

WIRING HARNESS, TCI UNIT BATTERY ASSY.

FIG. NO. 21

WIRING HARNESS, TCI UNIT & BATTERY ASSY.

REF. NO.	PART NO.	DESCRIPTION	NO. OFF APACHE RTR 160	NO. OFF APACHE RTR 160 HYPER EDGE	NO. OFF APACHE RTR 160 HYPER EDGE REFRESH	REMARKS
1	N9324120	WIRING HARNESS	1	1	-	
1A	N9161190	WIRING HARNESS	-	-	1	
2	N9160900	SWITCH ASSY. STOP LAMP RR	1	1	1	
3	N8111110	SPRING STOP LAMP SWITCH	-	1	1	
3A	N2110620	SPRING STOP LAMP SWITCH	1	-	-	
4	420452700	HEX SCREW M6x12	1	1	1	
5	0330408	SPRING WASHER M6	3	3	3	
6	R1060070	REGULATOR DC	1	1	1	
7	N9160840	HORN RH	1	1	1	
7A	N9160850	HORN LH	1	1	1	
8	0330318	WAVE SPRING WASHER M8	1	1	1	
9	420477700	HEX SCREW M8x16	1	1	1	
10	N9122690	CLAMP BATTERY	1	1	1	
11	M7060190	BATTERY ASSY.UNCHARGED (9 AMPS)	1	1	1	
12	N3060110	BATTERY BREATHER HOSE	1	1	1	
13	N9124430	HOLDER COMP. BATTERY	1	1	-	
13A	N9125310	HOLDER COMP. BATTERY	-	-	1	
14	N9161260	RELAY PASS BY ASSY.	1	-	1	
15	N9160680	CUSHION SET - BATTERY	1	1	1	
16	N9212210	LOCK SET	1	1	1	
17	N3160340	CLAMP WIRING HARNESS	2	2	2	
18	0331708	CRR PAN HEAD SCREW M5x12	2	2	2	
19	N9161890	THROTTLE SWITCH	1	1	1	
20	N9160480	STEERING /IGNITION LOCK	1	1	1	
21	420518700	CRR PAN HEAD SCREW M6x20	2	2	2	
22	N9321400	BLANK KEY	1	1	1	
23	N9060370	TCI UNIT	1	1	1	
24	0332275	CRR PAN HEAD SCREW M6x16	2	2	2	
25	N9212390	STICKER COMP. BATTERY	1	1	1	
26	N9160920	STARTER RELAY ASSY.	1	1	1	
27	N9161900	CORD SET STARTER RELAY	1	1	1	
28	N9161640	CAP WATER PROOF COUPLER	-	1	1	
29	N9215570	ILLUMINATION RING	1	1	1	N.I

N.I - NOT ILLUSTRATED

RTR160

FIG.No. 22

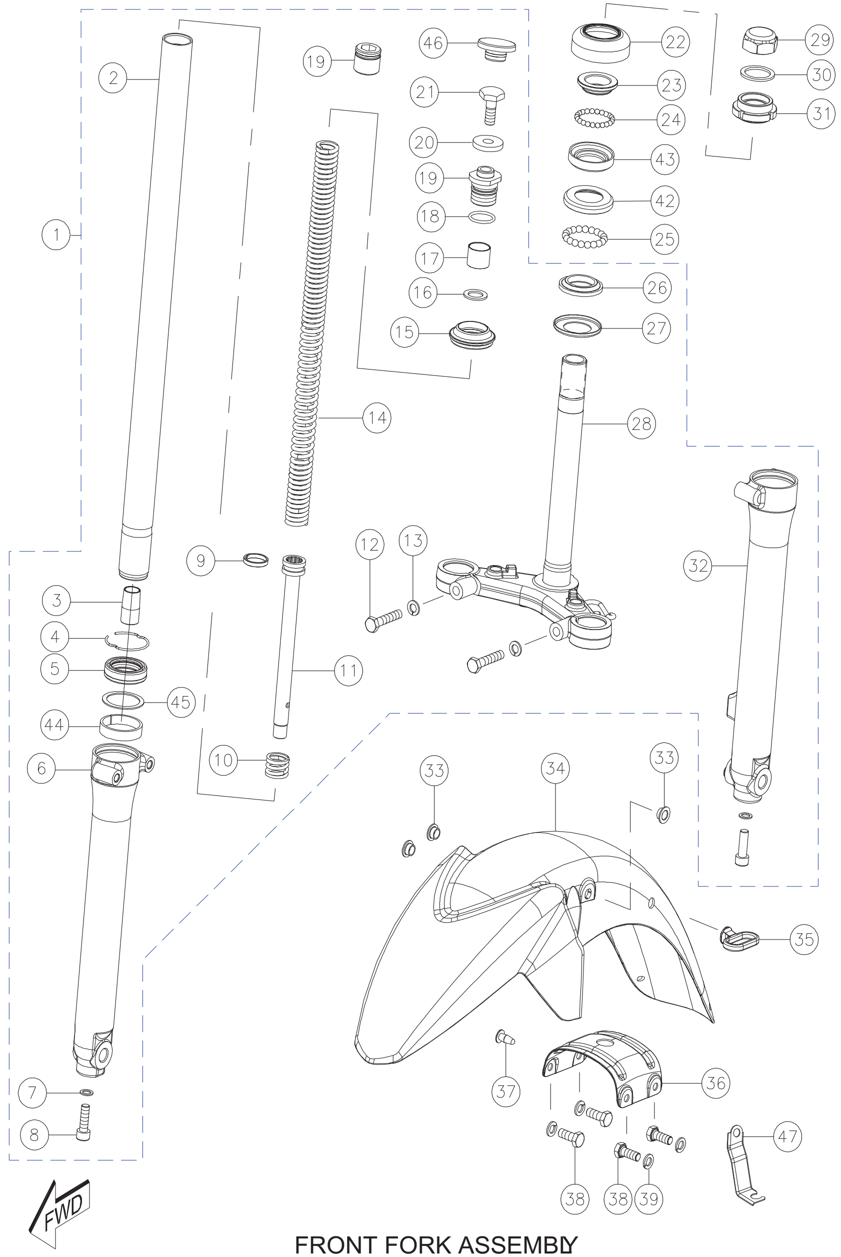

FRONT FORK ASSEMBLY

FIG. NO. 22

FRONT FORK ASSEMBLY

REF. NO.	PART NO.	DESCRIPTION	NO. OFF APACHE RTR 160	NO. OFF APACHE RTR 160 HYPER EDGE	NO. OFF APACHE RTR 160 HYPER EDGE REFRESH	REMARKS
1	N9101080	FRONT FORK ASSY. (DISC)	1	1	1	
2	N9101090	INNER TUBE	2	2	2	
3	N3100300	SPINDLE TAPER	2	2	2	
4	N3100290	CIRCLIP FRONT FORK	2	2	2	
5	N3102420	SEAL OIL	2	2	2	
6	N9100870	FORK OUTER TUBE RH (DISC)	1	1	1	
7	N8101230	HEX ALEN SCREW	2	2	2	
8	N8101220	WASHER	2	2	2	
9	N3100330	PISTON RING	2	2	2	
10	N8101320	SPRING PISTON	2	2	2	
11	N9101120	PISTON FRONT FORK	2	2	2	
12	420955700	HEX SCREW M8x40	2	2	2	
13	0330318	WAVE SPRING WASHER M8	2	2	2	
14	N5101939	SPRING FRONT FORK	2	2	2	
15	N3102410	DUST SEAL	2	2	2	
16	N5101979	WASHER SPRING SEAT	2	2	2	
17	N9101010	SPACER FRONT FORK	2	2	2	
18	M7100300	O RING	1	1	1	
19	M7100310	NUT FRONT FORK	2	2	2	
20	N5101989	PLAIN WASHER	2	2	2	
21	N5101999	HEX BOLT	2	2	2	
22	M7101170	DUST SEAL STEERING UPPER	1	1	1	
23	S1101150	RACE STEERING OUTER	1	1	1	
24	420404000	3/16 BALLS	22	22	22	
25	K3200450	STEERING BALL LOWER (DIA 6.35)	19	19	19	

FIG.No. 22

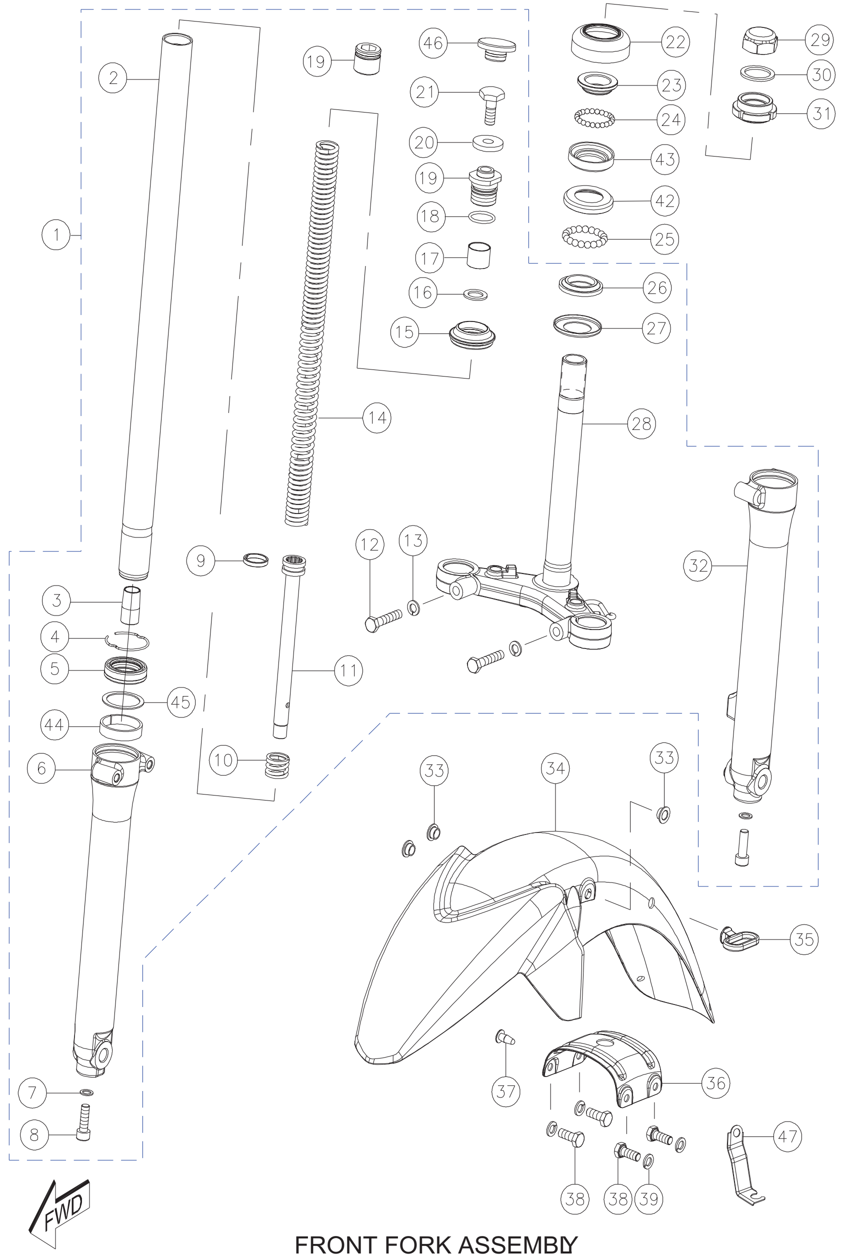

FRONT FORK ASSEMBLY

TVS

FIG. NO. 22

FRONT FORK ASSEMBLY

REF. NO.	PART NO.	DESCRIPTION	NO. OFF APACHE RTR 160	NO. OFF APACHE RTR 160 HYPER EDGE	NO. OFF APACHE RTR 160 HYPER EDGE REFRESH	REMARKS
26	N8120910	CONE BOTTOM	1	1	1	
27	N8120920	DUST SEAL STEERING LOWER	1	1	1	
28	N9322140	LOWER BRKT COMP.	1	1	1	
29	N2100170	LOCK NUT STEERING	1	1	1	
30	410043700	SPECIAL WASHER	1	1	1	
31	0254088	ARRESTER STEERING STEM	1	1	1	
32	N9101060	FORK OUTER TUBE LH (DISC)	1	1	1	
33	M7101020	SPACER FRONT FENDER	4	4	4	
34	-----	FRONT FENDER	1	1	1	REF. COLOR PART PAGE
35	N3100220	GUIDE CABLE	1	1	1	
36	M7100570	BRACE FRONT FENDER	1	1	1	
37	N3100230	CLIP	1	1	1	
38	420454700	HEX SCREW M8x20	4	4	4	
39	0330318	WAVE SPRING WASHER M8	4	4	4	
40	N9100960	LEG ASSY. LH FRONT FORK (DISC)	1	1	1	N.I
41	N9100970	LEG ASSY. RH FRONT FORK (DISC)	1	1	1	N.I
42	K3100590	CUP BOTTOM	1	1	1	
43	S1125290	RACE STEERING INNER	1	1	1	
44	N9100770	DU BUSH	1	1	1	
45	N9100890	WASHER DU BUSH	1	1	1	
46	N9101020	CAP FRONT FORK TOP	2	2	2	
47	N9112180	CLAMP SPEED SENSOR	1	1	1	
48	N8320070	STEERING CONE KIT	1	1	1	**

N.I - NOT ILLUSTRATED
** - REFER KIT & KIT CONTENTS

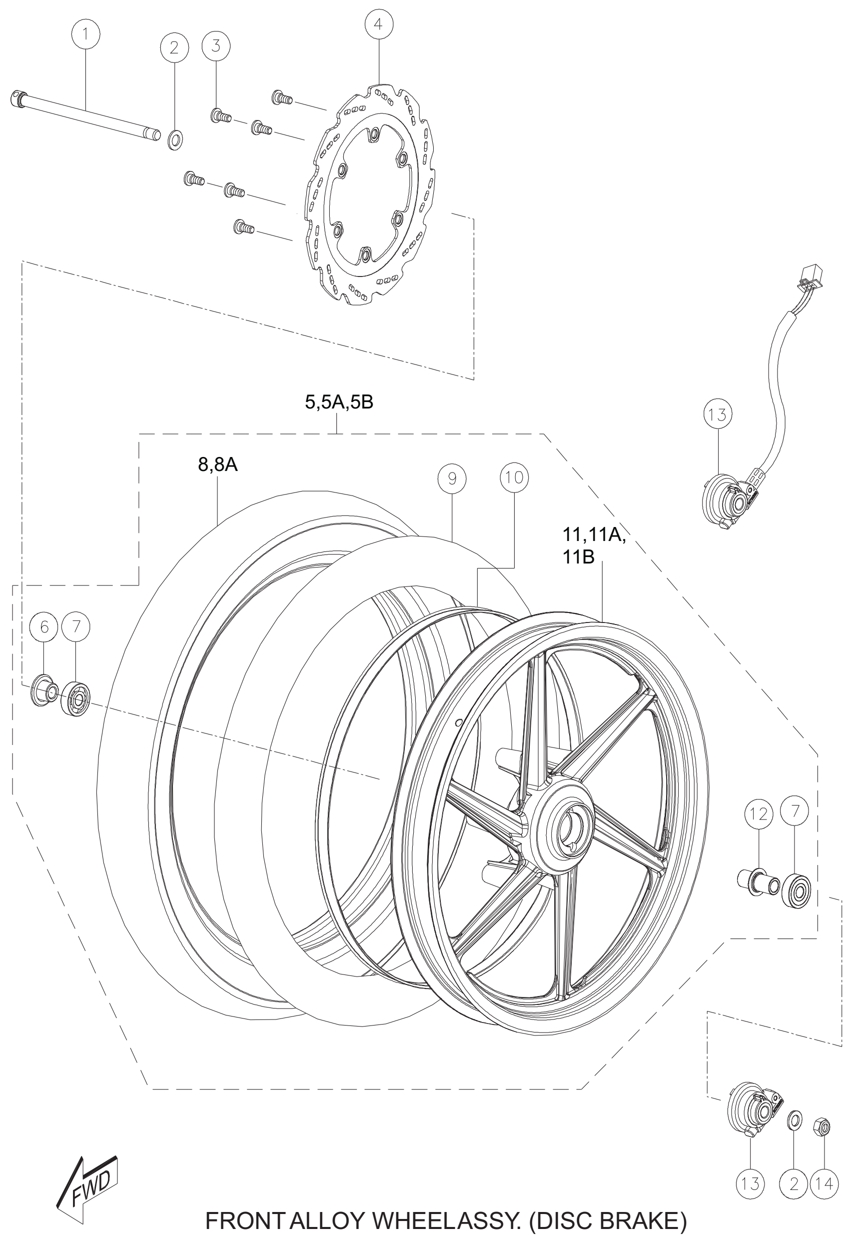

FRONT ALLOY WHEEL ASSY. (DISC BRAKE)

FIG. NO. 23

FRONT ALLOY WHEEL ASSY.

REF. NO.	PART NO.	DESCRIPTION	NO. OFF APACHE RTR 160	NO. OFF APACHE RTR 160 HYPER EDGE	NO. OFF APACHE RTR 160 HYPER EDGE REFRESH	REMARKS
1	N3110990	AXLE Ø12 x 221.5	1	1	1	
2	0335538	PUNCHED WASHER 12.5x22x2.3	2	2	2	
3	M7110090	SCREW SPECIAL M8	6	6	6	
4	N9111890	DISC PLATE	1	1	1	
5	N9111180	WHEEL ASSY. FR (ALLOY DISC)	1	-	-	
5A	N9112410	WHEEL ASSY. FR WITH TAPESET	1	1	-	
5B	N9113700	WHEEL ASSY. FRONT WITH TS	-	-	1	TUBE LESS
6	M7110100	SPACER COMP. FR HUB BEARING	1	1	1	
7	N3200010	BALL BEARING 12 x 37 x 12	2	2	2	
8	N9110640	TYRE FRONT 90 / 90-17	1	1	-	
8A	N9112910	TYRE FRONT 90 / 90-17 TUBE LE	-	-	1	TUBE LESS
9	N9110650	TUBE ASSY. 90 / 90-17	1	1	-	
10	N9110660	PROTECTOR WHEEL INNER TUBE	1	1	-	
11	N9111100	ALLOY WHEEL FR 1.85x17 BLACK	1	-	-	
11A	N9112720	ALLOY WHEEL WITH TAPE SET FR.	1	1	-	
11B	N9112860	ALLOY WHEEL WITH TAPE SET FR.	-	-	1	
12	M7110160	SPACER COMP. LH	1	1	1	
13	N9111800	SPEED SENSOR	1	1	1	
14	0334158	U NUT M12 x 1.25	1	1	1	
15	N9214120	TAPESET ALLOY WHEEL FRONT	6	6	-	
15A	N9322310	TAPESET ALLOY WHEEL FR (6 PIC)	1	1	-	
15B	N9222359	TAPESET ALLOY WHEEL FRONT	-	-	2	

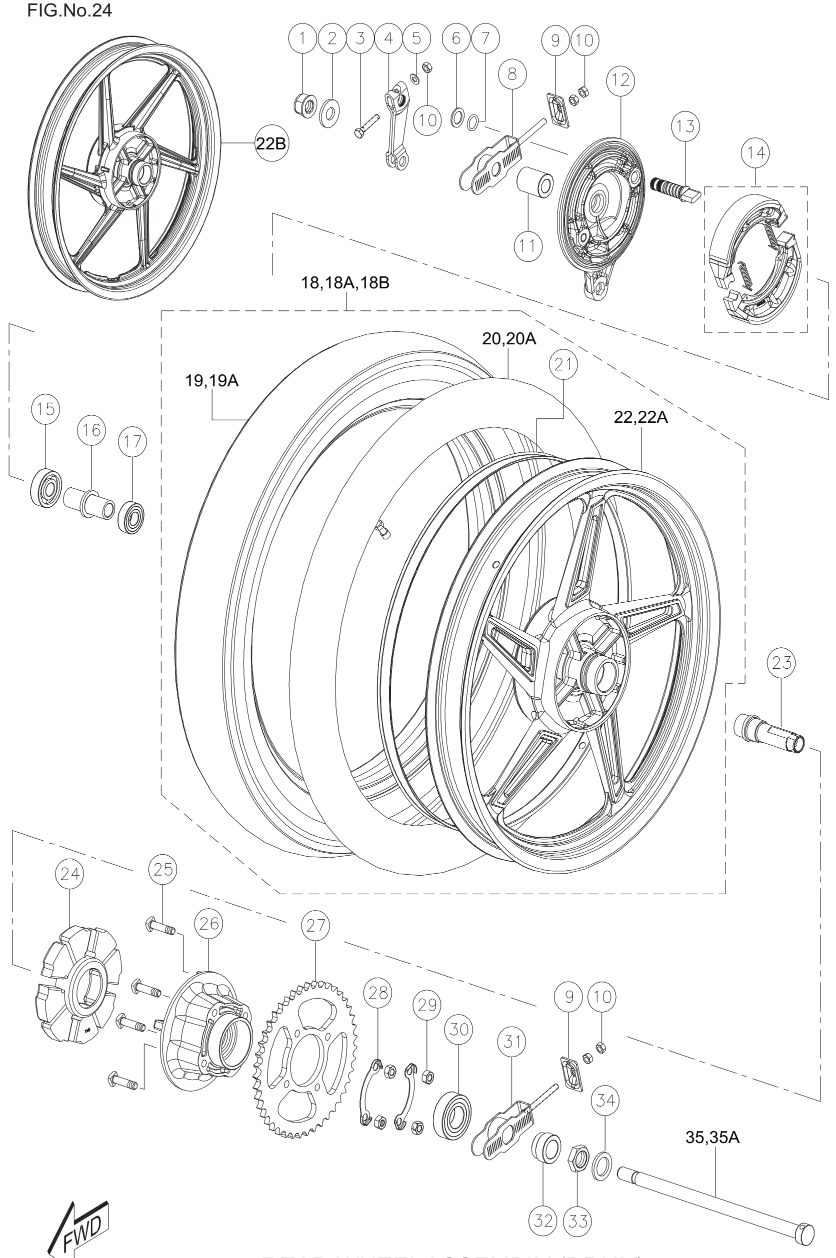

REAR WHEEL ASSEMBLY (DRUM)

FIG. NO. 24

REAR WHEEL ASSEMBLY (DRUM)

REF. NO.	PART NO.	DESCRIPTION	NO. OFF APACHE RTR 160	NO. OFF APACHE RTR 160 HYPER EDGE	NO. OFF APACHE RTR 160 HYPER EDGE REFRESH	REMARKS
1	K200410	U NUT M14x1.5	1	1	1	
2	M7200020	PUNCHED WASHER 14.5x32x3.2	1	1	1	
3	0331248	HEX BOLT M6x1x33	1	1	1	
4	M7110770	LEVER BRAKE CAM	1	1	1	
5	0335578	PUNCHED WASHER 6.5x13.0x1.0	1	1	1	
6	0335698	PUNCHED WASHER 14.5x22x1.6	1	1	1	
7	0178030	O RING BRAKE CAM-BR	1	1	1	
8	N9091340	CHAIN ADJUSTER COMP. RH	1	1	1	
9	N3091850	CLAMP CHAIN ADJUSTER	2	2	2	
10	420305700	HEX NUT M6	4	4	4	
11	M71107505D	SPACER REAR AXLE RH BLACK	1	1	1	
12	11124505D	PANEL BRAKE REAR BLACK	1	1	1	
13	N2110130	CAM BRAKE	1	1	1	
14	1110020	BRAKE SHOE SET DIA130	1	1	1	
15	1339510	BALL BEARING 15x42x13	1	1	1	
16	1182200	SPACER COMP.	1	1	1	
17	1339520	BALL BEARING 15x35x11	1	1	1	
18	N9111160	WHEEL ASSY. REAR BLACK	1	1	-	
18A	N9112430	WHEEL ASSY. REAR + TAPESET	1	1	-	
18B	N9113540	WHEEL ASSY. REAR + TAPESET	-	-	1	TUBE LESS
19	N9111150	TYRE REAR 100/80-18A (ES)	1	1	-	
19A	N9112920	TYRE TUBELESS 17 x 90	-	-	1	TUBE LESS
20	N9111790	TUBE ASSY.WHEEL INNER	1	-	-	
20A	N3110440	TUBE ASSY.WHEEL INNER	-	1	-	
21	N3110450	PROTECTOR WHEEL INNER TUBE	1	1	-	
22	N9111110	ALLOY WHEEL RR BLACK (6 SPOKES)	1	1	-	
22A	N9112730	ALLOY WHEEL WITH TAPE SET RR(6 SP)	1	1	-	

RTR160

FIG.No.24

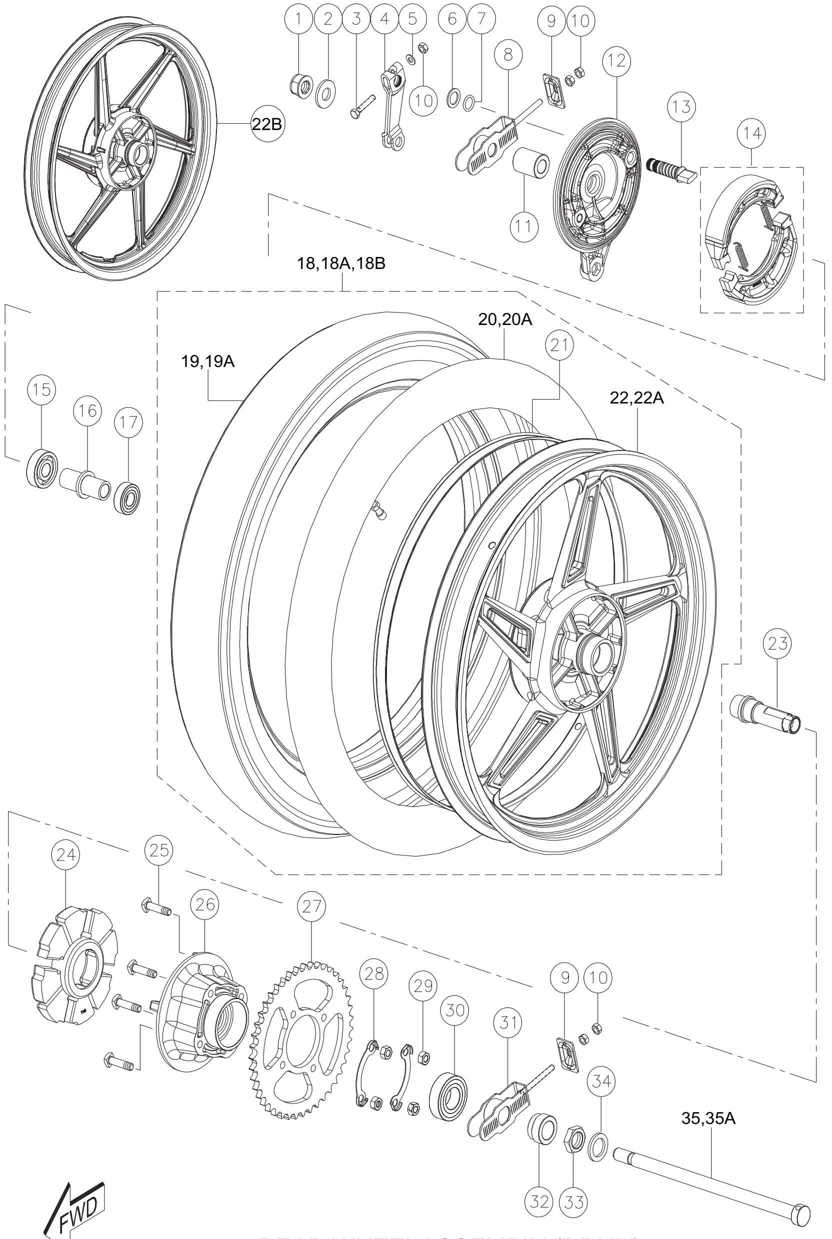

REAR WHEEL ASSEMBLY (DRUM)

TVS

FIG. NO. 24

REAR WHEEL ASSEMBLY (DRUM)

REF. NO.	PART NO.	DESCRIPTION	NO. OFF APACHE RTR 160	NO. OFF APACHE RTR 160 HYPER EDGE	NO. OFF APACHE RTR 160 HYPER EDGE REFRESH	REMARKS
22B	N9112770	ALLOY WHEEL WITH TAPE SET RR(6 SP)	-	-	1	TUBE LESS
23	N9110690	SHAFT REAR SPROCKET MTG.	1	1	1	
24	1181150	ABSORBER RR WHEEL HUB SHOCK	1	1	1	
25	0331318	BOLT REAR SPROCKET	4	4	4	
26	1181070	DRUM REAR SPROCKET-130 DIA	1	1	1	
27	N9111560	SPROCKET REAR 44T	1	1	1	
28	1181160	WASHER REAR SPROCKET	2	2	2	
29	0334548	HEX NUT M8	4	4	4	
30	1339120	BALL BEARING 25x52x15	1	1	1	
31	N9091330	CHAIN ADJUSTER COMP. LH	1	1	1	
32	M7110740	SPACER RR AXLE LH	1	1	1	
33	0334640	HEX NUT M20	1	1	1	
34	M7200010	PUNCHED WASHER 21.6x32x3.2	1	1	1	
35	M7110580	AXLE COMP. REAR	1	1	-	
35A	N9110700	AXLE COMP. REAR	-	-	1	
36	N9321930	CHAIN & SPROCKET KIT 13/44/124L	1	-	-	**
36A	N9322710	CHAIN AND SPROCKET KIT(13/44/124)	-	1	1	**
37	N9214130	TAPE SET REAR WHEEL	6	6	-	N.I
38	N9322320	TAPESET KIT WHEEL RR (6 PIECES)	1	1	-	N.I
39	N9222359	TAPESET KIT WHEEL RR (6 PIECES)	-	-	1	N.I

** - REF. KIT & KIT CONTENTS
N.I - NOT ILLUSTRATED

FIG.No.25

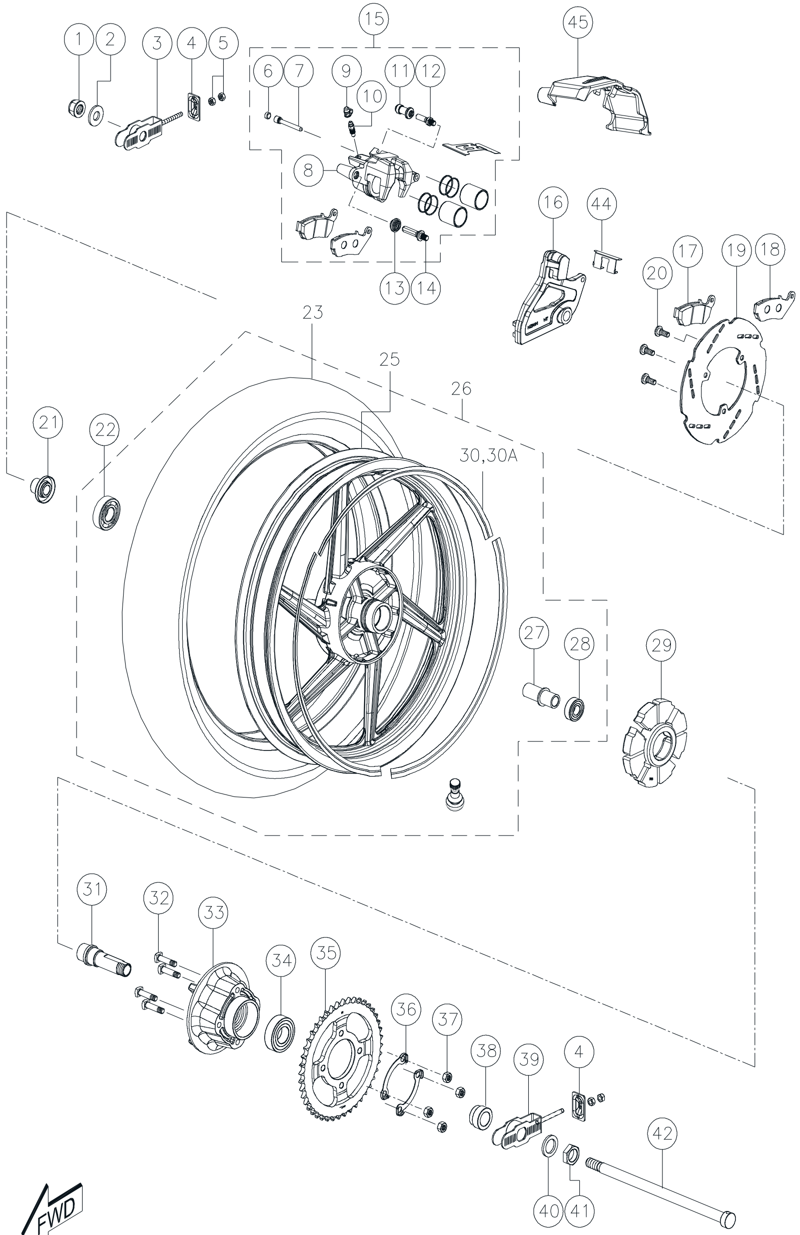

REAR WHEEL ASSEMBLY - DISC

FIG. NO. 25

REAR WHEEL ASSEMBLY (DISC)

REF. NO.	PART NO.	DESCRIPTION	NO. OFF			REMARKS
			APACHE			
			RTR 160	RTR 160 HYPER EDGE	RTR 160 HYPER EDGE REFRESH	
						REF.KIT
1	K200410	U NUT M14x1.5	-	-	1	
2	M7200020	WASHER 14.5x32x3.2	-	-	1	
3	N9091340	CHAIN ADJUSTER RH	-	-	1	
4	N3091850	CLAMP CHAIN ADJUSTER	-	-	2	
5	0334640	HEX NUT M20	-	-	4	
6	-----	PLUG PIN	-	-	1	N9322190
7	-----	PIN HANGER	-	-	2	“
8	-----	BODY CALIPER REAR	-	-	1	“
9	-----	CAP BLEEDER	-	-	1	N9322250
10	-----	BLEEDER	-	-	1	“
11	-----	BUSH BOOT PIN	-	-	1	N9322190
12	-----	PIN BOLT B	-	-	1	N9322220
13	-----	BOOT B	-	-	1	N9322190
14	-----	PIN BOLT A	-	-	2	N9322220
15	N9112060	CALIPER ASSY. REAR	-	-	1	
16	-----	BRKT COMP. REAR CALIPER	-	-	1	N9322220
17	-----	PAD COMP. INNER	-	-	1	N9322240
18	-----	PAD COMP. OUTER	-	-	1	
19	N9111340	DISC PLATE 200mm REAR	-	-	1	
20	M7110090	SCREW SPECIAL M8	-	-	3	
21	N9112190	SPACER COMP. RR WHEEL RH	-	-	1	
22	1339510	BALL BEARING 15x42x13	-	-	1	

** - REF. KIT & KIT CONTENTS

FIG.No.25

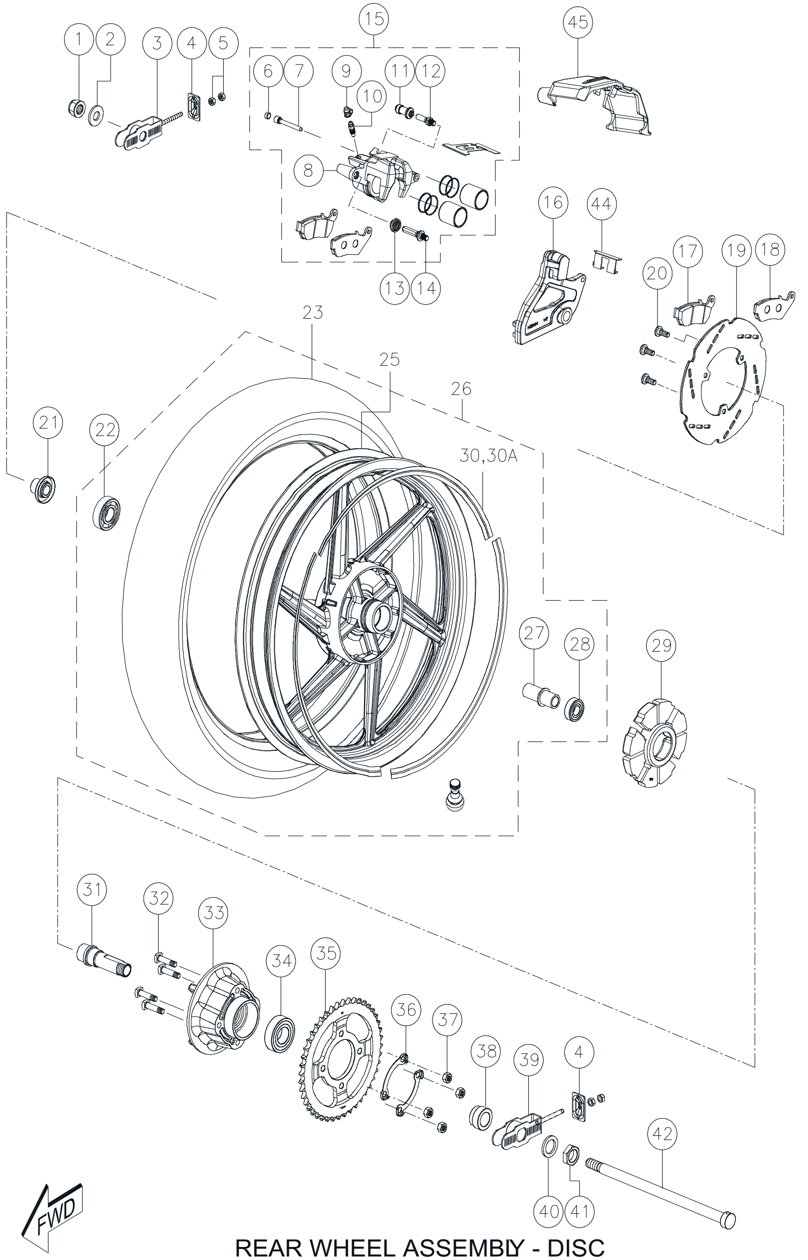

REAR WHEEL ASSEMBLY - DISC

FIG. NO. 25

REAR WHEEL ASSEMBLY (DISC)

REF. NO.	PART NO.	DESCRIPTION	NO. OFF APACHE RTR 160	NO. OFF APACHE RTR 160 HYPER EDGE	NO. OFF APACHE RTR 160 HYPER EDGE REFRESH	REMARKS
23	N9112920	TYRE TUBELESS 17x 110	-	-	1	
24	N9112840	ALLOY WHEEL RR DISC 17x2.15	-	-	1	
25	N9113720	REAR WHEEL ASSY. DISC	-	-	1	
26	1182200	SPACER COMP.	-	-	1	
27	1339520	BALL BEARING 15x35x11	-	-	1	
28	1181150	SHOCK ABSORBER RR WHEEL HUB	-	-	1	
29	N9214130	TAPESET REAR WHEEL	-	-	6	
29A	N9222359	TAPESET WHEEL FR RIM 17 RED	-	-	1	
30	N9110690	SHAFT REAR SPROCKET MTG	-	-	1	
31	0331318	BOLT REAR SPROCKET	-	-	4	
32	1181070	DRUM REAR SPROCKET 130DIA	-	-	1	
33	1339120	BALL BEARING 25x52x15	-	-	1	
34	N9111560	SPROCKET REAR 44T	-	-	1	
35	1181160	WASHER REAR SPROCKET	-	-	2	
36	0334548	HEX NUT M8	-	-	4	
37	M7110740	SPACER REAR AXLE LH	-	-	1	
38	N9091330	CHAIN ADJUSTER COMP. LH	-	-	1	
39	M7200010	WASHER 21.6x32x3.2	-	-	1	
40	0334640	HEX NUT M20	-	-	1	
41	N9110700	REAR AXLE 15x290	-	-	1	
42	N9322320	TAPESET KIT WHEEL RR (6PIEC)	-	-	1	N.I
43	N9323730	PAD SPRING RR DISC BRAKE	-	-	1	
44	N9113410	COVER REAR DISC	-	-	1	

N.I - NOT ILLUSTRATED

FIG.No.26

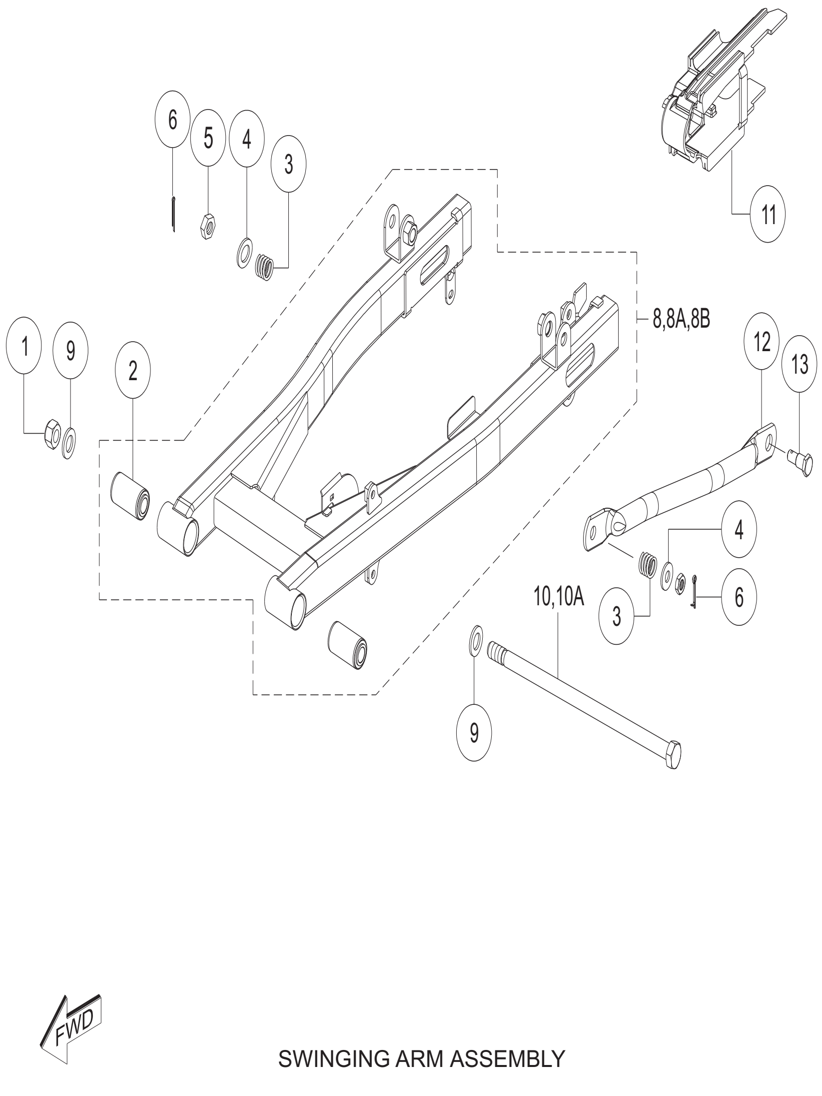

SWINGING ARM ASSEMBLY

FIG. NO. 26

SWINGING ARM ASSEMBLY

REF. NO.	PART NO.	DESCRIPTION	NO. OFF APACHE RTR 160	NO. OFF APACHE RTR 160 HYPER EDGE	NO. OFF APACHE RTR 160 HYPER EDGE REFRESH	REMARKS
1	0334158	NUT REAR SWINGING ARM PIVOT	1	1	1	
2	N3090670	BUSH SWING ARM	2	2	2	
3	3207018	SPRING	2	1	1	(DRUM)
4	0336018	PUNCHED WASHER 8.5x20x2	2	2	2	“
5	0334218	HEX NUT M8x8	2	2	2	“
6	0330048	SPLIT PIN 2x20	2	2	2	“
7	0330318	WAVE SPRING WASHER	1	1	1	“
8	N9321960	SWING ARM ASSY. BLACK (W BUSH)	1	-	-	
8A	N9322300	SWING ARM ASSY. BLACK (W BUSH)	-	1	-	
8B	N9091650	SWING ARM ASSY. BLACK (W BUSH)	-	-	1	
9	0335678	PUNCHED WASHER 12.5x24x3.2	2	2	2	
10	N5111050	SHAFT COMP. SWINGARM	1	-	-	
10A	C8090230	AXLE 12x225	-	1	1	
11	N8090380	BUFFER CHAIN TOUCH	1	1	1	
12	M7090970	TORQUE LINK COMP REAR	1	1	1	(DRUM)
13	N3090700	BOLT TORQUE LINK REAR	1	1	1	“

FIG.No.27

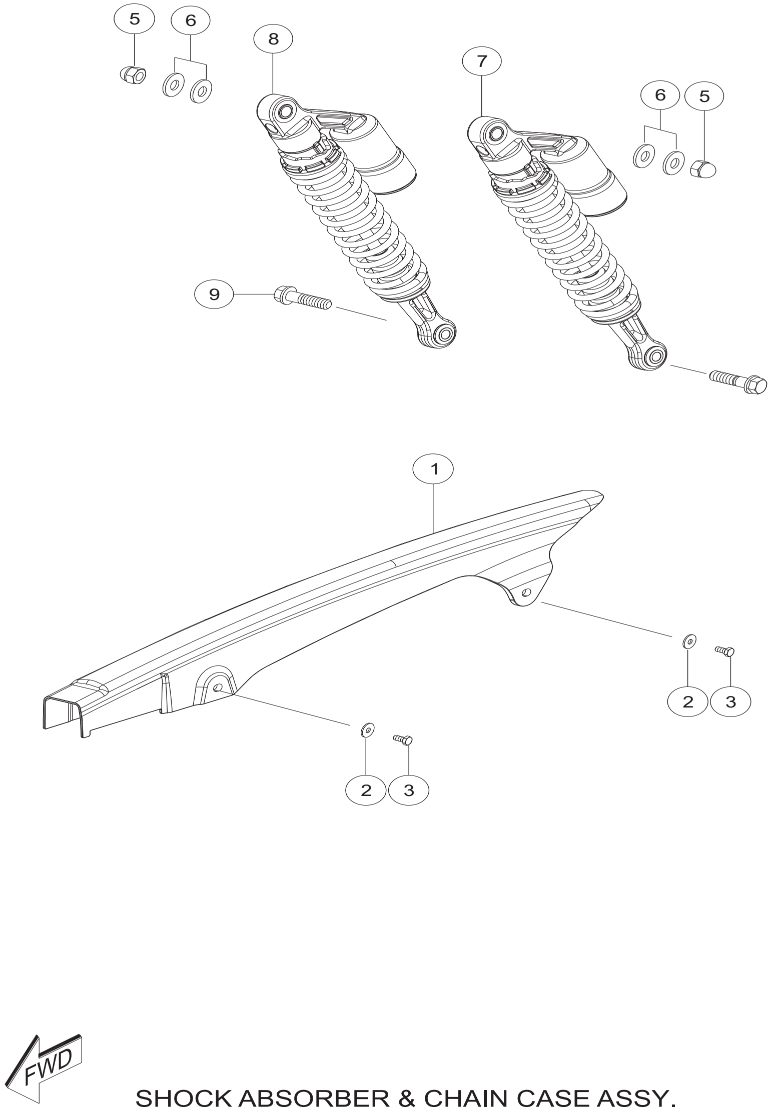

SHOCK ABSORBER & CHAIN CASE ASSY.

FIG. NO. 27

SHOCK ABSORBER & CHAIN CASE ASSY.

REF. NO.	PART NO.	DESCRIPTION	NO. OFF			REMARKS
			APACHE			
			RTR 160	RTR 160 HYPER EDGE	RTR 160 HYPER EDGE REFRESH	
1	N9091700	CHAIN COVER	1	1	1	
2	0335628	PUNCHED WASHER 10.5x24x2.3	2	2	2	
3	420452700	HEX SCREW M6x12	2	2	2	
4	N3200050	HEX FLANGE BOLT M10x1.5x36	2	2	2	
5	0334047	NUT REAR SHOCK ABSORBER	2	2	2	
6	0335628	PUNCHED WASHER 10.5x24x2.3	4	4	4	
7	N9091770	SHOCK ABSORBER LH (BLACK SPRING)	1	1	1	
8	N9091760	SHOCK ABSORBER RH (BLACK SPRING)	1	1	1	

FIG.No. 28

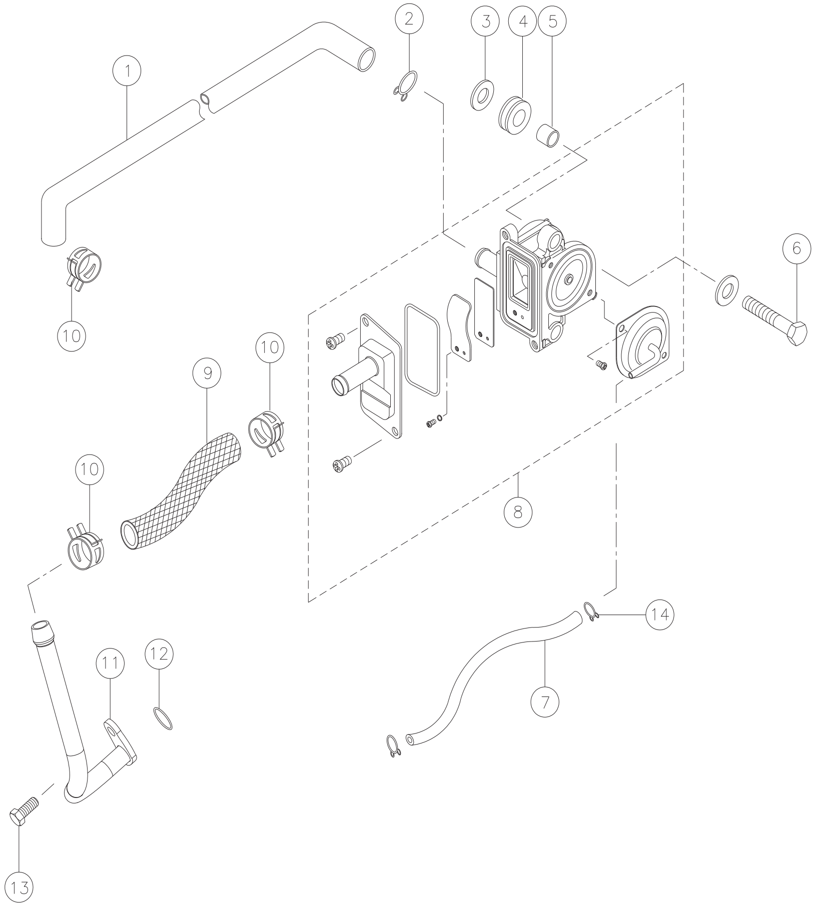

SECONDARY AIR INJECTION ASSY.

FIG. NO. 28

SECONDARY AIR INJECTION ASSY.

REF. NO.	PART NO.	DESCRIPTION	NO. OFF APACHE RTR 160	NO. OFF APACHE RTR 160 HYPER EDGE	NO. OFF APACHE RTR 160 HYPER EDGE REFRESH	REMARKS
1	N9041080	HOSE AIR INLET	1	1	1	
2	N2041150	HOSE CLIP	2	2	2	
3	0335608	PUNCHED WASHER	4	4	4	
4	N2041670	CUSHION VALVE MOUNTING	2	2	2	
5	N3160220	SPACER	2	2	2	
6	N3200190	HEX BOLT M6x30	2	2	2	
7	N9040300	HOSE AIR CUT VALVE	1	1	1	
8	N9041060	SECONDARY AIR INJECTION VALVE	1	1	1	
9	M7040060	HOSE AIR OUTLET	1	1	1	
10	N2041160	HOSE CLIP No. 1	2	2	2	
11	M7040080	PIPE COMP. SECONDARY AIR INJECTION	1	1	1	
12	N8040340	O RING 1.9x10	1	1	1	
13	M1200640	HEX SCREW M6x16 6.8 ZNG	1	1	1	
14	414147000	CLIP FUEL HOSE	2	2	2	

RTR160

FIG.No.29

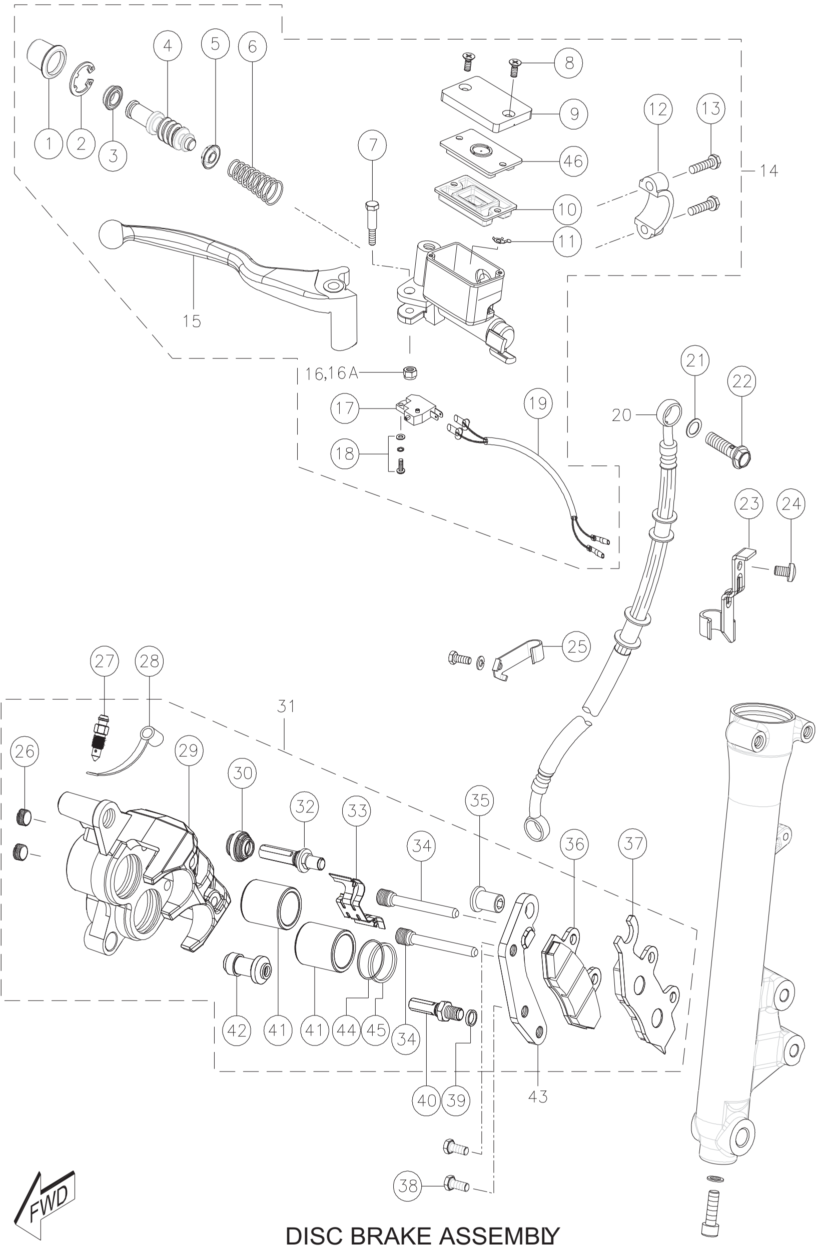

DISC BRAKE ASSEMBLY

TVS

FIG. NO. 29

DISC BRAKE ASSEMBLY

REF. NO.	PART NO.	DESCRIPTION	NO. OFF APACHE RTR 160	NO. OFF APACHE RTR 160 HYPER EDGE	NO. OFF APACHE RTR 160 HYPER EDGE REFRESH	REMARKS
						REF. KIT. No.
1	-----	BOOTS ASSEMBLY	1	1	1	N9321490
2	-----	SNAP RING	1	1	1	“
3	-----	S CUP	1	1	1	“
4	-----	PISTON	1	1	1	“
5	-----	P CUP	1	1	1	“
6	-----	SPRING	1	1	1	“
7	-----	HAND LEVER BOLT	1	1	1	N9321500
8	-----	SCREW RESERVOIR CAP	2	2	2	N9321530
9	-----	RESERVOIR CAP	1	1	1	“
10	N9322010	DIAPHRAGM	1	1	1	N9321490
11	-----	PROTECTOR	1	1		1”
12	-----	HOLDER	1	1	1	N9321510
13	-----	HOLDER BOLT	2	2	2	“
14	N91111403C	ASSY. MASTER CYLINDER	1	1	1	
15	-----	LEVER RH	1	1	1	N9322020
16	-----	FLANGE NUT	1	1	1	N9321500
16A	-----	FLANGE NUT	1	1	1	
17	-----	SWITCH ASSY	1	1	1	N9321520
18	-----	SCREW & WASHER	1	1	1	“
19	-----	SUB HARNESS	1	1	1	“
20	-----	HOSE COMP BRAKE	1	1	1	N9322030
21	N9111330	GASKET	4	4	4	N9321540
22	N9111320	BANJO BOLT	2	2	2	“
23	N9111270	CLAMP HOSE UNDER BRACKET	1	1	1	

RTR160

FIG.No.29

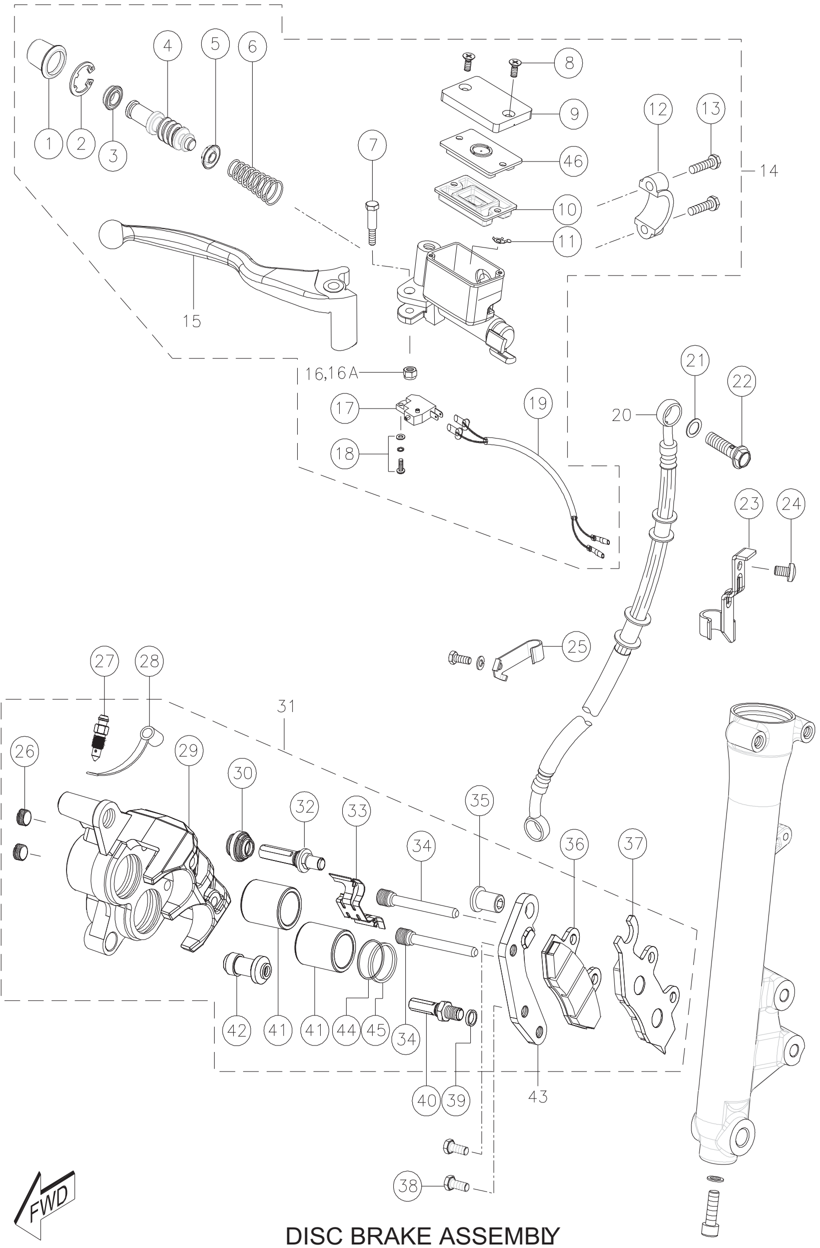

DISC BRAKE ASSEMBLY

TVS

FIG. NO. 29

DISC BRAKE ASSEMBLY

REF. NO.	PART NO.	DESCRIPTION	NO. OFF APACHE RTR 160	NO. OFF APACHE RTR 160 HYPER EDGE	NO. OFF APACHE RTR 160 HYPER EDGE REFRESH	REMARKS
						REF. KIT. No.
24	3257448	SCREW M6x10	1	1	1	
25	N9111220	CLAMP BRAKE HOSE	1	1	1	
26	----	PLUG PIN	2	2	2	
27	-----	BLEEDER	1	1	1	N9321600
28	-----	CAP BLEEDER	1	1	1	“
29	-----	BODY CALIPER COMP.	1	1	1	
30	-----	BOOT B	1	1	1	N9321550
31	N9111930	CALIPER ASSY.	1	1	1	
32	-----	PIN BOLT A	1	1	1	N9321550
33	-----	SPRING PAD	1	1	1	“
34	-----	PIN HANGER	2	2	2	“
35	-----	INNER HEX NUT	1	1	1	N9321570
36	-----	PAD COMP INNER	1	1	1	N9111300
37	-----	PAD COMP OUTER	1	1	1	“
38	U2200010	HEX FLANGE BOLT M8x27	2	2	2	
39	-----	SPRING WASHER	1	1	1	N9321570
40	-----	PIN BOLT B	1	1	1	N9321550
41	-----	PISTON CALIPER	2	2	2	“
42	-----	BUSH BOOT PIN	1	1	1	“
43	-----	BRACKET COMP FRONT	1	1	1	N9321860
44	-----	DUST SEAL 1	2	2	2	N9321550
45	-----	DUST SEAL 2	2	2	2	“
46	-----	PLATE DIAPHRAGM	1	1	1	N9321530

FIG.No.30

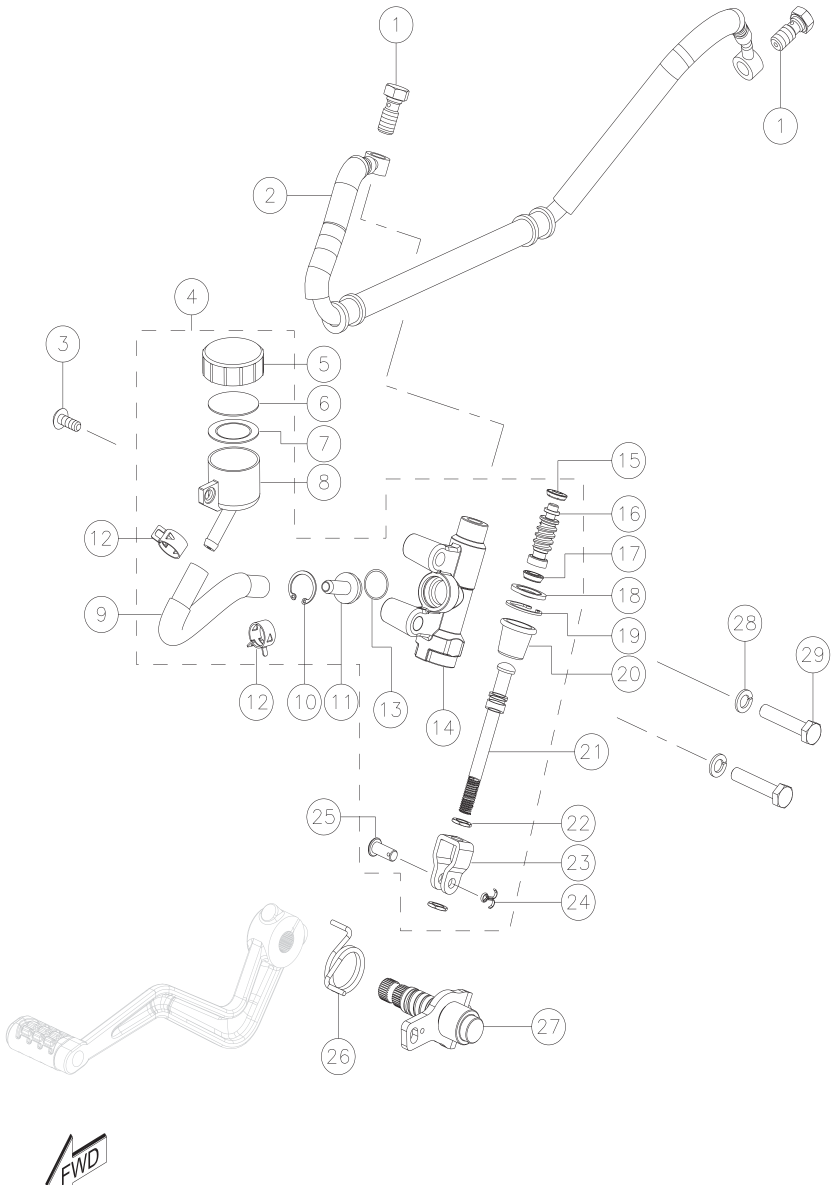

MASTER CYLINDER ASSY. RR DISC BRAKE

FIG. NO. 30

MASTER CYLINDER ASSY. RR DISC BRAKE

REF. NO.	PART NO.	DESCRIPTION	NO. OFF APACHE RTR 160	NO. OFF APACHE RTR 160 HYPER EDGE	NO. OFF APACHE RTR 160 HYPER EDGE REFRESH	REMARKS
						REF. KIT. No.
1	M7110330	BANJO BOLT	-	-	2	
2	N9111430	BRAKE HOSE & OIL RESERVOIR	-	-	1	
3	0332275	CRR PAN HEAD SCREW	-	-	1	
4	N9112070	MASTER CYLINDER ASSY. RR DISC BR.	-	-	1	
5	-----	CAP OIL TANK	-	-		1N9322270
6	-----	PLATE DIAPHRAGM	-	-	1	“
7	-----	DIAPHRAGM	-	-		1”
8	-----	OIL TANK	-	-	1	“
9	-----	HOSE OIL	-	-	1	N9322260
10	-----	CIRCLIP	-	-	1	“
11	-----	INSERT (LOOSE FITTING)	-	-	1	“
12	-----	BUCKLE HOSE	-	-	2	“
13	-----	O RING	-	-		1”
14	-----	M/C BODY REAR	-	-	1	“
15	-----	CUP PRIMARY	-	-	1	“
16	-----	PISTON M/C REAR	-	-	1	“
17	-----	CUP SECONDARY	-	-	1	“
18	-----	STOP PLATE	-	-	1	“
19	-----	CIRCLIP	-	-	1	“
20	-----	BOOT COMP.	-	-	1	“
21	-----	BUSH ROD	-	-	1	“
22	-----	NUT ROD	-	-	2	”
23	-----	JOINT ROD	-	-	1	“
24	-----	COTTER PIN	-	-	1	“
25	-----	PIN	-	-	1	“
26	N9111870	SPRING BRAKE RETURN	-	-	1	
27	N9111840	SHAFT COMP. BRAKE PEDAL	-	-	1	
28	0330318	SPRING WASHER	-	-	2	
29	420955700	HEX SCREW M8x40	-	-	2	

FIG.No.31

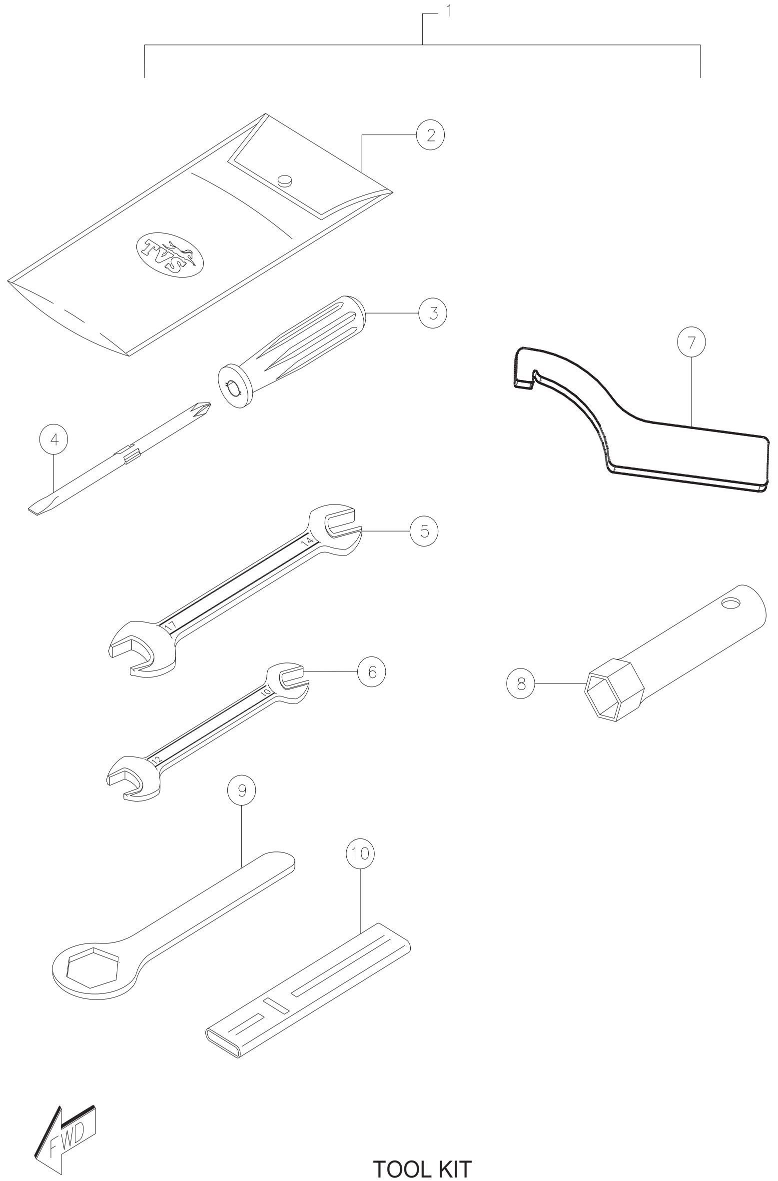

TOOL KIT

FIG. NO. 31

TOOL KIT

REF. NO.	PART NO.	DESCRIPTION	NO. OFF APACHE RTR 160	NO. OFF APACHE RTR 160 HYPER EDGE	NO. OFF APACHE RTR 160 HYPER EDGE REFRESH	REMARKS
1	N9212270	TOOL KIT SET	1	1	1	
2	-----	TOOL BAG	1	1	1	
3	-----	GRIP DRIVER	1	1	1	
4	-----	BIT (+) (-)	1	1	1	
5	-----	OPEN END SPANNER 14x17	1	1	1	
6	-----	OPEN END SPANNER 10x12	1	1	1	
7	-----	ADJUSTER SHOCK ABSORBER RR	1	1	1	
8	-----	BOX SPANNER 16	1	1	1	
9	-----	RING SPANNER	1	1	1	
10	-----	HANDLE RING SPANNER	1	1	1	
		SPECIAL TOOL				
1	M1310010	HOLDER ASSY.	1	1	1	
2	M1310020	PULLER ASSY. ROTOR	1	1	1	
3	M1310070	TAPPET ADJUSTER	1	1	1	
4	M1310110	PULLER ASSEMBLY	1	1	1	
5	N9322410	PC DYN	1	1	1	

APACHE RTR 160, KIT & KIT CONTENTS

S.NO	KIT PART NO	KIT DESCRIPTION	MODEL	KIT CONTENTS			QTY
				S.NO	PART NO	DESCRIPTION	
1	N9321550	KIT CALIPER (MAJOR)	APACHE & RTR	1		BUSH BOOT, PIN	1
				2		BOOT,B	1
				3		PAD SPRING	1
				4		DUST SEAL	2
				5		PLUG	1
				6		PIN HANGER	2
				7		PLUG,PIN	2
				8		PISTON, CALIPER	2
				9		SEAL , PISTON	2
2	N9321560	KIT CALIPER (MINOR)	APACHE & RTR	1		BOOT B	1
				2		CAP BLEEDER	1
				3		SEAL - PISTON	2
				4		BUSH BOOT PIN	1
				5		DUST SEAL	2
3	N9321570	KIT CARRIER ASSY(MAJOR)	APACHE & RTR	1		BRACKET COMP. FRONT APACHE	1
				2		PIN BOLT, B	1
				3		PIN BOLT, A	1
				4		INNER HEXAGON NUT	1
				5		SPRING WASHER	1
4	N9321860	KIT CARRIER ASSY(MAJOR)	RTR	1		BRACKET COMP. FRONT RTR	1
				2		PIN BOLT, B	1
				3		PIN BOLT, A	1
				4		INNER HEXAGON NUT	1
				5		SPRING WASHER	1
5	N9321580	KIT CARRIER ASSY (MINOR)	APACHE & RTR	1		BOOT,B	1
				2		BUSH BOOT PIN	1
6	N9111300	KIT PAD ASSY	APACHE & RTR	1		PAD COMP OUTER	1
				2		PAD COMP INNER	1

APACHE RTR 160, KIT & KIT CONTENTS

S.NO	KIT PART NO	KIT DESCRIPTION	MODEL	KIT CONTENTS			QTY
				S.NO	PART NO	DESCRIPTION	
7	N9321600	KIT BLEEDER	APACHE & RTR	1		BLEEDER	1
				2		CAP BLEEDER	1
8	N9321490	KIT MASTER CYLINDER(MAJOR)	APACHE & RTR	1		DIAPHRAGM	1
				2		O RING	1
				3		GAUGE COMP.LEVEL	1
				4		SPRING	1
				5		CIRCLIP	1
				6		BOOT COMP	1
				7		PISTON.FRONT	1
				8		CUP.SECONDARY	1
				9		CUP.PRIMARY	1
				10		PROTECTOR	1
9	N9321500	KIT LEVER	APACHE & RTR	1		HAND LEVER APACHE	1
				2		FLANGE NUT .6MM	1
				3		BOLT BRAKE LEVER	1
10	N9322020	KIT LEVER	RTR	1		LEVER RH RTR	1
				2		HAND LEVER BOLT	1
				3		FLANGE NUT	1
11	N9321510	KIT HOLDER	APACHE & RTR	1		HOLDER	1
				2		HOLDER BOLT	2
12	N9321520	KIT SWITCH ASSY	APACHE & RTR	1		SWITCH ASSY	1
				2		SUB HARNESS	1
				3		SCREW & WASHER	1
13	N9321530	KIT RESERVOIR	APACHE & RTR	1		PLATE.DIAPHRAGM	1
				2		RESERVOIR CAP	1
				3		SCREW.PLATE.M4x12	2

APACHE RTR 160, KIT & KIT CONTENTS

S.NO	KIT PART NO	KIT DESCRIPTION	MODEL	KIT CONTENTS			QTY
				S.NO	PART NO	DESCRIPTION	
14	M7321980	CYLINDER HEAD ASSY. KIT	RTR	1	M70112107D	HEAD COMP CYLINDER ASSY AX 150	1
				2	M7040229	INSERT AIR INJECTION	1
				2	M70108307D	COVER CYLINDER HEAD - MACHINED	1
				3	M1010380	CAP INSPECTION HOLE	2
				4	M7011010	SPARK PLUG FIERO	1
				5	M1010390	O-RING 29.5x3	2
				6	M1010090	PIN CYL HEAD COVER KNOCK	2
				7	M1010540	PLUG ROCKER ARM SHAFT	2
				8	M1080520	GASKET - OIL DRAIN	2
				9	M7010270	VALVE INTAKE	1
				10	M7010280	VALVE EXHAUST	1
				11	M1010570	SPRING VALVE INNER	2
				12	M1010580	SPRING VALVE OUTER	2
				13	N2011040	RETAINER VALVE SPRING	2
				14	S1010320	COTTER VALVE	4
				15	M1010610	SEAT VALVE SPRING	2
				16	M1010620	SEAL VALVE STEM OIL	2
				17	M7010780	ARM VALVE ROCKER ASSY	2
				18	S1010240	SCREW TAPPET ADJUSTING	2
				19	S1010250	NUT TAPPET ADJUSTING	2
				20	M7010850	SHAFT VALVE ROCKER ARM	2
				21	M1201090	WAVE SPRING WASHER M12	2
				22	M7010800	CAMSHAFT COMP	1
				23	M1200010	HEX FLANGE BOLT M6x55	4
				24	M1010350	GASKET CYL HEAD COVER BOLT	4
				25	M1200780	STUD BOLT CYL HEAD	4
				26	M1200590	HEX FLANGE BOLT M6x35	4
				27	M1200600	HEX FLANGE BOLT M6x45	2
				28	M7010910	PLUG CYL HEAD	1

APACHE RTR 160, KIT & KIT CONTENTS

S.NO	KIT PART NO	KIT DESCRIPTION	MODEL	KIT CONTENTS			QTY
				S.NO	PART NO	DESCRIPTION	
15	M7322020	RING SET STD	RTR	1	M7020340	RING PISTON Ist STD	1
				2	M7020350	RING PISTON 2nd STD	1
				3	M7020360	RING PISTON OIL SET STD	1
16	M7321960	RING SET I O/S	RTR	1	M7321820	RING PISTON Ist I O/S	1
				2	M7321840	RING PISTON 2nd I O/S	1
				3	M7321860	RING PISTON OIL SET I O/S	1
17	M7321970	RING SET II O/S	RTR	1	M7321830	RING PISTON Ist II O/S	1
				2	M7321850	RING PISTON 2nd II O/S	1
				3	M7321870	RING PISTON OIL SET II O/S	1
18	M7321630	PISTON KIT STD	RTR	1	M7020330	PISTON	1
				2	M7322020	RING SET PISTON STD	1
				3	M7020370	PISTON PIN	1
				4	M1010440	CIRCLIP 17x1.0 PISTON PIN	2
19	M7321640	PISTON KIT 1 O/S	RTR	1	M7321800	PISTON I O/S	1
				2	M7321960	RING SET PISTON I O/S	1
				3	M7020370	PISTON PIN	1
				4	M1010440	CIRCLIP 17x1.0 PISTON PIN	2
20	M7321650	PISTON KIT II O/S	RTR	1	M7321810	PISTON I O/S	1
				2	M7321970	RING SET PISTON II O/S	1
				3	M7020370	PISTON PIN	1
				4	M1010440	CIRCLIP 17x1.0 PISTON PIN	2
21	M7322000	CYLINDER BLOCK & PISTON KIT	RTR	1	M70112607D	CYLINDER COMPLETE	1
				2	M7020330	PISTON STD	1
				3	M7322020	RING SET PISTON STD	1
				4	M7020370	PIN PISTON	1
				5	M1010440	CIRCLIP 17x1.0 PISTON PIN	2
				6	M7010210	GASKET CYLINDER HEAD	1
				7	M1010660	GASKET CYLINDER	1

APACHE RTR 160, KIT & KIT CONTENTS

S.NO	KIT PART NO	KIT DESCRIPTION	MODEL	KIT CONTENTS			QTY
				S.NO	PART NO	DESCRIPTION	
22	M7322010	ENGINE VALVE KIT	RTR	1	S1010320	COTTER VALVE	4
				2	M1010590	RETAINER VALVE SPRING	2
				3	M1010570	SPRING VALVE INNER	2
				4	M1010580	SPRING VALVE OUTER	2
				5	M1010610	SEAT VALVE SPRING	2
				6	M1010620	SEAL VALVE STEM OIL	2
				7	M7010270	VALVE INTAKE	1
				8	M7010280	VALVE EXHAUST	1
23	M7321580	OIL SEAL KIT	APACHE & RTR	1	N2081720	OIL SEAL	1
				2	M1200340	OIL SEAL 10 X 17 X 5	1
				3	N2200550	OIL SEAL 12 X 2 X 17	1
				4	M7200250	OIL SEAL 27 X 40 X 6	1
24	M1320340	O RING KIT ENGINE	APACHE & RTR	1	M1080600	O' RING CAP OIL FILTER	1
				2	M1080400	O' RING GAUGE OIL LEVEL	1
				3	N2081690	O' RING PLUG C.S.HOLE	1
				4	M1080610	O' RING OIL STRAINER	1
				5	M1080590	O' RING OIL FILTER	1
25	M7321460	MAJOR KIT - CARBURETTOR	APACHE & RTR	1	M7321310	JET HOLDER	1
				2	M1040810	O RING JET HOLDER	1
				3	M7321290	JET NEEDLE	1
				4	M1040250	E RING, JET NEEDLE	1
				5	M1040270	NEEDLE VALVE ASSY	1
				6	M1040390	GUIDE HOLDER ASSY.	1
				7	M1040380	SPRING STARTER	1
				8	M1040370	PLUNGER STARTER	1
				9	M1040870	O RING STARTER	1
26	N9323970	KIT CON ROD APA RTR 160 ALL-YELLOW GRD	RTR	1	M7020269	CONNECTING ROD	1
				2	M1201260	NEEDLE CAGE CRANK PIN 28x36x16.8 RED	1
				3	M2020030	CRANK PIN FIERO ES	1

APACHE RTR 160, KIT & KIT CONTENTS

S.NO	KIT PART NO	KIT DESCRIPTION	MODEL	KIT CONTENTS S.NO	PART NO	DESCRIPTION	QTY
27	N9321930	CHAIN & SPROCKET KIT	RTR	1	N9111770	CHAIN ASSEMBLY 124 LINKS	1
				2	M7080920	SPROCKET FRONT 13T	1
				3	N9111560	SPROCKET REAR 44T	1
				4	1181160	WASHER REAR SPROCKET	2
28	N8320070	STEERING CONE KIT	APACHE & RTR	1	420404000	3/16 BALLS	22
				2	S1101150	RACE STEERING OUTER	1
				3	S1125290	RACE STEERING INNER	1
				4	K3200450	STEERING BALL LOWER (dia 6.35)	19
				5	N8120910	CONE BOTTOM	1
				6	K3100590	CUP BOTTOM	1
29	N9321940	KIT PROP STAND	RTR	1	N9124640	PROP STAND	1
				2	N9200210	BOLT PROP STAND	1
				3	K200690	HEX NUT	1
				4	N5121610	SPRING CENTER STAND	1
30	M7322050	CRANK CASE ASSY RH	RTR	1	M70300907D	CRANKCASE COMP RH	1
				2	M1080360	UNION BREATHER	1
31	M7321890	SET PLATE CLUTCH DRIVE	RTR	1	N3070010	PLATE CLUTCH DRIVE	5
32	M7321900	SET PLATE CLUTCH DRIVEN	RTR	1	N3070020	PLATE CLUTCH DRIVEN	4
33	M7321880	KIT CLUTCH CABLE	APACHE	1	M7321710	CABLE CLUTCH	1
				2	M7321700	ROD CLUTCH RELEASE	1
				3	N9200280	CLIP CABLE	1
34	M7322040	SPRING CLUTCH	RTR	1	M7070440	SPRING CLUTCH	4
35	N9324420	KIT CYLINDER HEAD & COVER APACHE RTR 160	RTR	1	M70112107D	CYLINDER HEAD COMP WITH PIPE INSERT	1
				2	M70108307D	COVER CYLINDER HEAD TITAN GREY	1
				3	M1010090	PIN CYLINDER HEAD COVER KNOCK	1

TVS APACHE RTR 160 PAINTED PARTS

APACHE RED

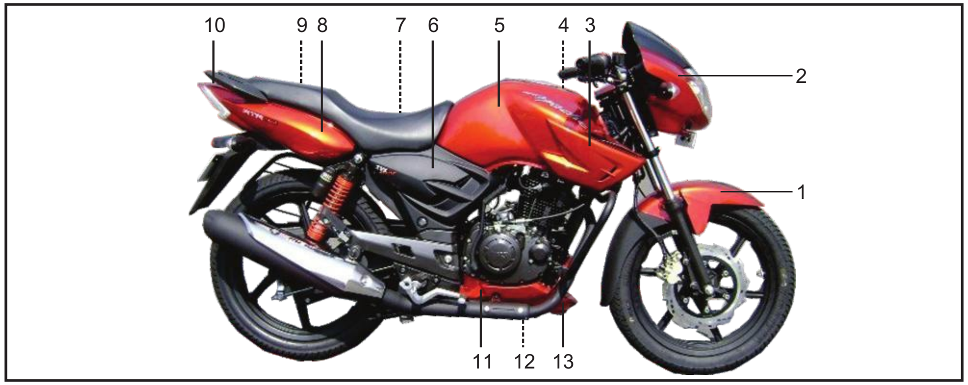

S.No.	PART NO	DESCRIPTION
1	N92201602HA	FENDER FRONT ALLOY WHEEL
2	N92202392H	HOUSING HEADLAMP FRONT
3	N92218402H	COVER FUEL TANK RH
4	N92218302H	COVER FUEL TANK LH
5	N91410602H	TANK COMP FUEL
6	N92202609D	COVER FRAME RH
7	N92202709D	COVER FRAME LH
8	N92201402HA	COVER SEAT TAIL RH
9	N92201302HA	COVER SEAT TAIL LH
10	N92201502H	COVER SEAT TAIL CENTER
11	N92213992H	ENGINE GUARD RH
12	N92213792H	ENGINE GUARD LH
13	N92213892H	ENGINE GUARD CENTER

TITANIUM GRAY

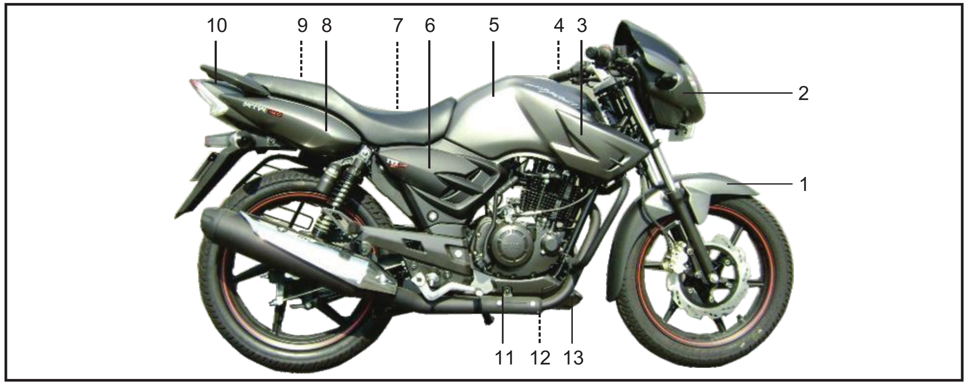

S.No.	PART NO	DESCRIPTION
1	N92201608D	FENDER FRONT ALLOY WHEEL
2	N92202398D	HOUSING HEADLAMP FRONT
3	N92218408D	COVER FUEL TANK RH
4	N92218308D	COVER FUEL TANK LH
5	N91410608D	TANK COMP FUEL
6	N92202609D	COVER FRAME RH
7	N92202709D	COVER FRAME LH
8	N92201408D	COVER SEAT TAIL RH
9	N92201308D	COVER SEAT TAIL LH
10	N92201508D	COVER SEAT TAIL CENTER
11	N92213998D	ENGINE GUARD RH
12	N92213798D	ENGINE GUARD LH
13	N92213898D	ENGINE GUARD CENTER

HG BLACK

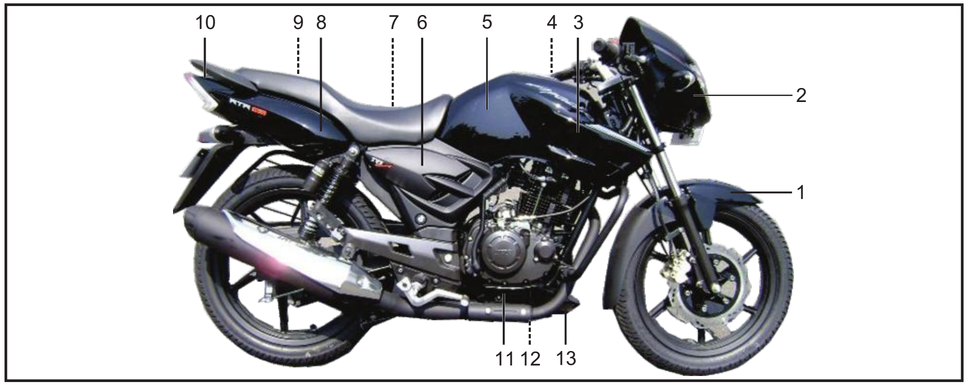

S.No.	PART NO	DESCRIPTION
1	N92201600DA	FENDER FRONT ALLOY WHEEL
2	N92202390D	HOUSING HEADLAMP FRONT
3	N92218400D	COVER FUEL TANK RH
4	N92218300D	COVER FUEL TANK LH
5	N91410600D	TANK COMP FUEL
6	N92202609D	COVER FRAME RH
7	N92202709D	COVER FRAME LH
8	N92201400DA	COVER SEAT TAIL RH
9	N92201300DA	COVER SEAT TAIL LH
10	N92201500D	COVER SEAT TAIL CENTER
11	N92213990D	ENGINE GUARD RH
12	N92213790D	ENGINE GUARD LH
13	N92213890D	ENGINE GUARD CENTER

'-----' LINE INDICATES LH SIDE

PEARL YELLOW

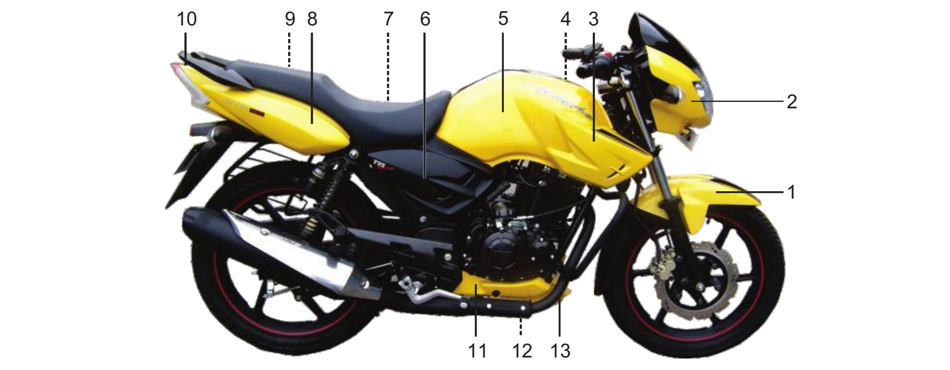

S.No.	PART NO	DESCRIPTION
1	N92201606R	FENDER FRONT ALLOY WHEEL
2	N92202396R	HOUSING HEADLAMP FRONT
3	N92218406R	COVER FUEL TANK LH
4	N92218306R	COVER FUEL TANK RH
5	N91410606R	TANK COMP FUEL
6	N92202609D	COVER FRAME RH
7	N92202709D	COVER FRAME LH
8	N92201406R	COVER SEAT TAIL RH
9	N92201306R	COVER SEAT TAIL LH
10	N92201506R	COVER SEAT TAIL CENTER
11	N92213996R	ENGINE GUARD RH
12	N92213796R	ENGINE GUARD LH
13	N92213896R	ENGINE GUARD CENTER

TVS APACHE RTR 160 HYPEREDGE PAINTED PARTS

HG BLACK

S.No.	PART NO	DESCRIPTION
1	N92201600DD	FENDER FRONT ALLOY WHEEL
2	N92202390D	HOUSING HEADLAMP FRONT
3	N92218400DB	COVER FUEL TANK RH
4	N92218300DB	COVER FUEL TANK LH
5	N91410600DC	TANK COMP FUEL
6	N92202609D	COVER FRAME RH
7	N92202709D	COVER FRAME LH
8	N92201400DA	COVER SEAT TAIL RH
9	N92201300DA	COVER SEAT TAIL LH
10	N92201500DC	COVER SEAT TAIL CENTER
11	N92213900D	ENGINE GUARD RH
12	N92213700D	ENGINE GUARD LH
13	N92213890D	ENGINE GUARD CENTER
14	N9216160	TAPESET BLACK

RED

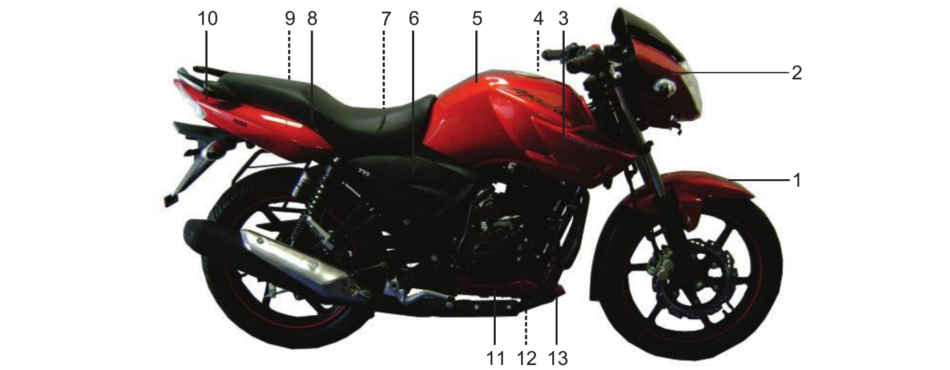

S.No.	PART NO	DESCRIPTION
1	N92201602HB	FENDER FRONT ALLOY WHEEL
2	N92202392H	HOUSING HEADLAMP FRONT
3	N92218402HA	COVER FUEL TANK RH
4	N92218302HA	COVER FUEL TANK LH
5	N91410602HA	TANK COMP FUEL
6	N92202609D	COVER FRAME RH
7	N92202709D	COVER FRAME LH
8	N92201402HA	COVER SEAT TAIL RH
9	N92201302HA	COVER SEAT TAIL LH
10	N92201502HA	COVER SEAT TAIL CENTER
11	N92213902H	ENGINE GUARD RH
12	N92213702H	ENGINE GUARD LH
13	N92213892H	ENGINE GUARD CENTER
14	N9216150	TAPESET APACHE RED

‘-----’ LINE INDICATES LH SIDE

PEARL YELLOW

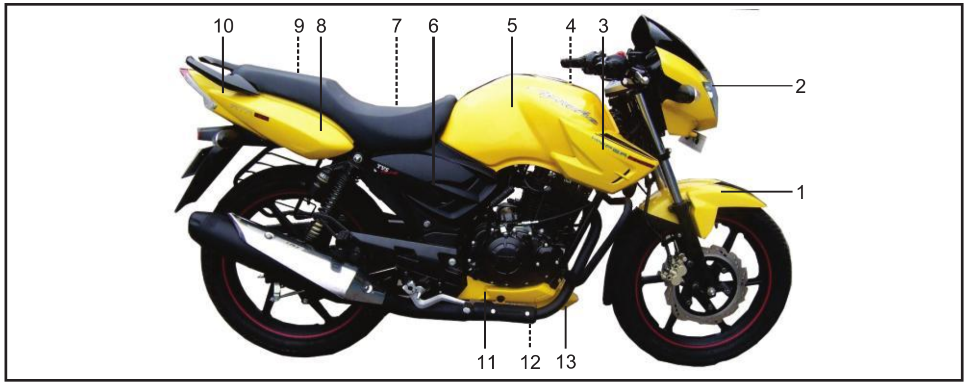

S.No.	PART NO	DESCRIPTION
1	N92201606RC	FENDER FRONT ALLOY WHEEL
2	N92202396R	HOUSING HEADLAMP FRONT
3	N92218406RC	COVER FUEL TANK RH
4	N92218306RC	COVER FUEL TANK LH
5	N91410606RB	TANK COMP FUEL
6	N92202609D	COVER FRAME RH
7	N92202709D	COVER FRAME LH
8	N92201406R	COVER SEAT TAIL RH
9	N92201306R	COVER SEAT TAIL LH
10	N92201506RC	COVER SEAT TAIL CENTER
11	N92213906R	ENGINE GUARD RH
12	N92213706R	ENGINE GUARD LH
13	N92213896R	ENGINE GUARD CENTER
14	N9216180	TAPESET PEARL YELLOW

TITANIUM GRAY

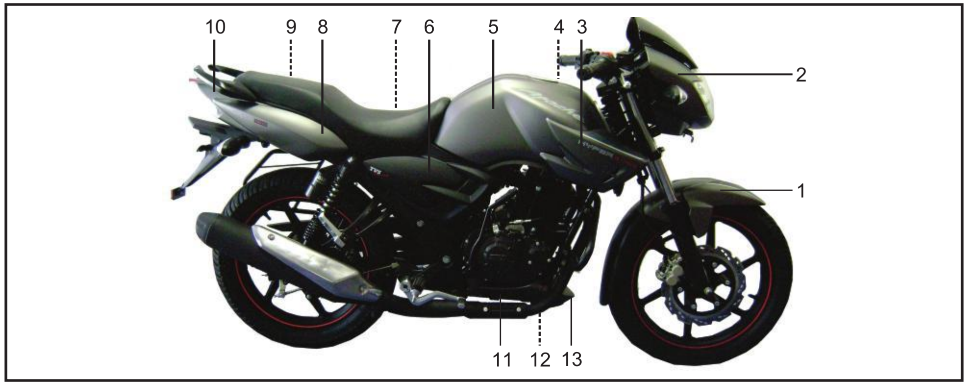

S.No.	PART NO	DESCRIPTION
1	N92201608DD	FENDER FRONT ALLOY WHEEL
2	N92202398D	HOUSING HEADLAMP FRONT
3	N92218408DB	COVER FUEL TANK RH
4	N92218308DB	COVER FUEL TANK LH
5	N91410608DB	TANK COMP FUEL
6	N92202609D	COVER FRAME RH
7	N92202709D	COVER FRAME LH
8	N92201408D	COVER SEAT TAIL RH
9	N92201308D	COVER SEAT TAIL LH
10	N92201508DD	COVER SEAT TAIL CENTER
11	N92213908D	ENGINE GUARD RH
12	N92213708D	ENGINE GUARD LH
13	N92213898D	ENGINE GUARD CENTER
14	N9216170	TAPESET T.GREY

TVS APACHE RTR 160 REFRESH (DUAL TONE) PAINTED PARTS

CAMELLIN GREEN LIGHT METALLIC (DUAL TONE)

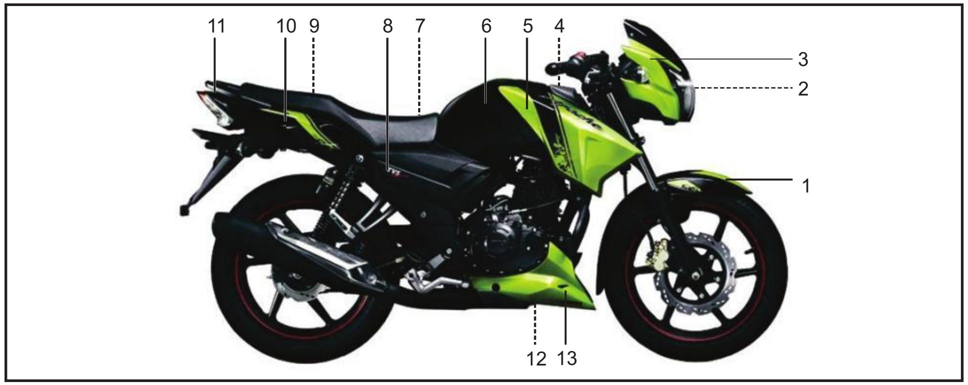

S.No.	PART NO	DESCRIPTION
1	N92201600DF	FENDER FRONT
2	N9222839EL	HOUSING HEAD LAMP FRONT LH
3	N9222809EL	HOUSING HEAD LAMP FRONT RH
4	N9222880EL	COVER FUEL TANK LH
5	N9222900EL	COVER FUEL TANK RH
6	N91411900DA	FUEL TANK COMP
7	N9222860	COVER FRAME LH
8	N9222870	COVER FRAME RH
9	N92222700DA	TAIL COVER LH
10	N92222800DA	TAIL COVER RH
11	N92222900DA	TAIL COVER CENTER
12	N9222750EL	ENGINE GUARD L
13	N9222760EL	ENGINE GUARD R
14	N9225010	TAPESET CGLM

‘-----’ LINE INDICATES LH SIDE

TVS APACHE RTR 160 REFRESH (DUAL TONE) PAINTED PARTS

TITANIUM GREY (DUAL TONE)

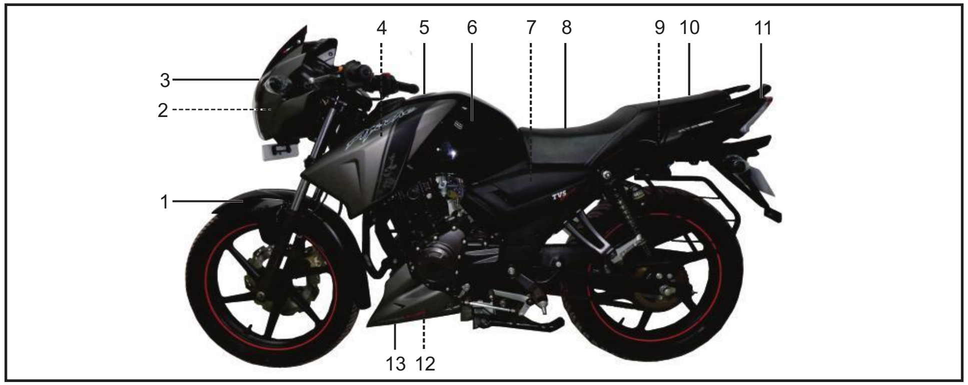

S.No.	PART NO	DESCRIPTION
1	N92201600DG	FENDER FRONT
2	N92228398D	HOUSING HEAD LAMP FRONT LH
3	N92228098D	HOUSING HEAD LAMP FRONT RH
4	N92228808DA	COVER FUEL TANK LH
5	N92229008DA	COVER FUEL TANK RH
6	N91411900DB	FUEL TANK COMP
7	N9222860	COVER FRAME LH
8	N9222870	COVER FRAME RH
9	N92222700DB	TAIL COVER LH
10	N92222800DB	TAIL COVER RH
11	N92222900DB	TAIL COVER CENTER
12	N92227508D	ENGINE GUARD L
13	N92227608DA	ENGINE GUARD R
14	N9224980	TAPESET T.GREY

RED (DUAL TONE)

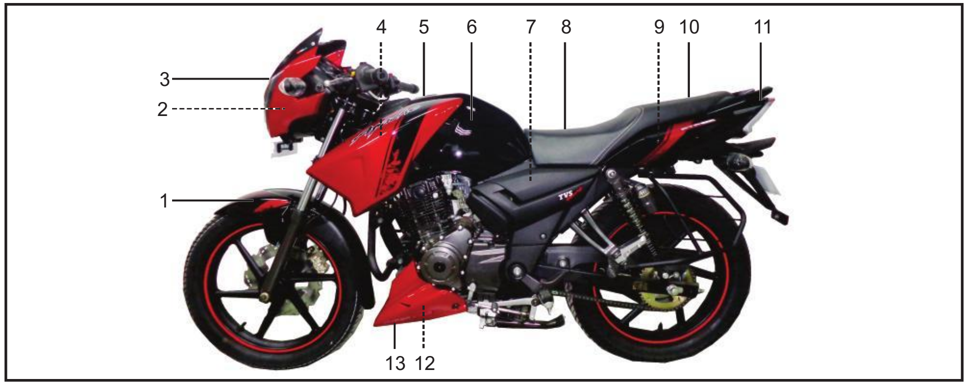

S.No.	PART NO	DESCRIPTION
1	N92201600DH	FENDER FRONT
2	N92228392H	HOUSING HEAD LAMP FRONT LH
3	N92228092H	HOUSING HEAD LAMP FRONT RH
4	N92228802H	COVER FUEL TANK LH
5	N92229002H	COVER FUEL TANK RH
6	N91411900DC	FUEL TANK COMP
7	N9222860	COVER FRAME LH
8	N9222870	COVER FRAME RH
9	N92222700DC	TAIL COVER LH
10	N92222800DC	TAIL COVER RH
11	N92222900DC	TAIL COVER CENTER
12	N92227502H	ENGINE GUARD L
13	N92227602H	ENGINE GUARD R
14	N9224950	TAPESET

PEARL YELLOW (DUAL TONE)

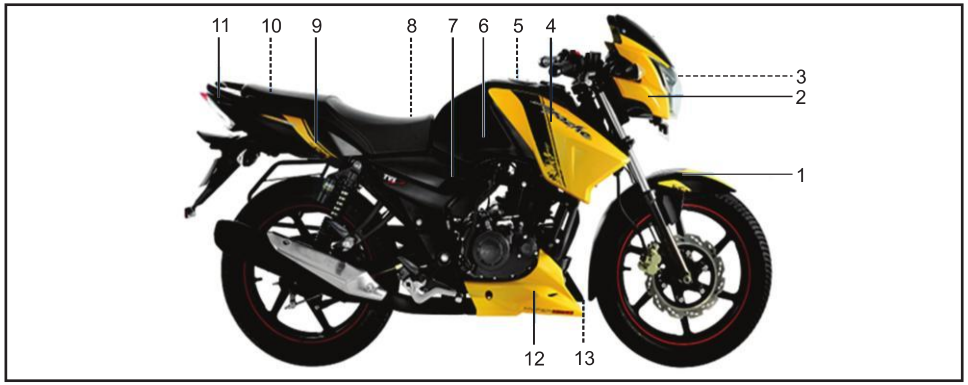

S.No.	PART NO	DESCRIPTION
1	N92201600DI	FENDER FRONT
2	N92228096R	HOUSING HEAD LAMP FRONT RH
3	N92228396R	HOUSING HEAD LAMP FRONT LH
4	N92229006RA	COVER FUEL TANK RH
5	N92228806RA	COVER FUEL TANK LH
6	N91411900DD	FUEL TANK COMP
7	N9222870	COVER FRAME RH
8	N9222860	COVER FRAME LH
9	N92222800DD	TAIL COVER RH
10	N92222700DD	TAIL COVER LH
11	N92222900DD	TAIL COVER CENTER
12	N92227606RA	ENGINE GUARD R
13	N92227506R	ENGINE GUARD L
14	N9224910	TAPESET

‘-----’ LINE INDICATES LH SIDE

TVS APACHE RTR 160 REFRESH (SINGLE TONE) PAINTED PARTS

RED (SINGLE TONE)

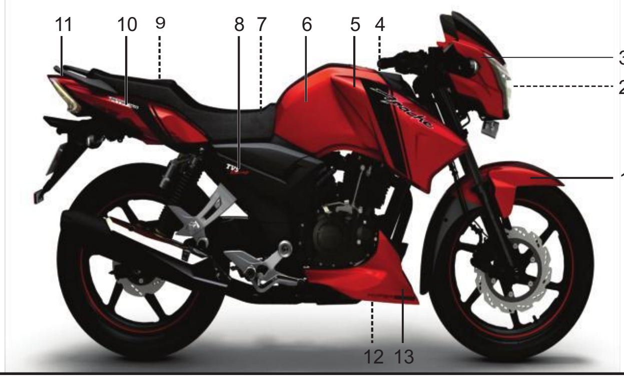

S.No.	PART NO	DESCRIPTION
1	N92201602HF	FENDER FRONT
2	N92228392H	HOUSING HEAD LAMP FRONT LH
3	N92228092H	HOUSING HEAD LAMP FRONT RH
4	N92228802HB	COVER FUEL TANK LH
5	N92229002HB	COVER FUEL TANK RH
6	N91411902HA	FUEL TANK COMP
7	N9222860	COVER FRAME LH
8	N9222870	COVER FRAME RH
9	N92222702HA	TAIL COVER LH
10	N92222802HA	TAIL COVER RH
11	N92222902HA	TAIL COVER CENTER
12	N92227502H	ENGINE GUARD L
13	N92227602H	ENGINE GUARD R
14	N9226720	TAPESET RED

TITANIUM GREY (SINGLE TONE)

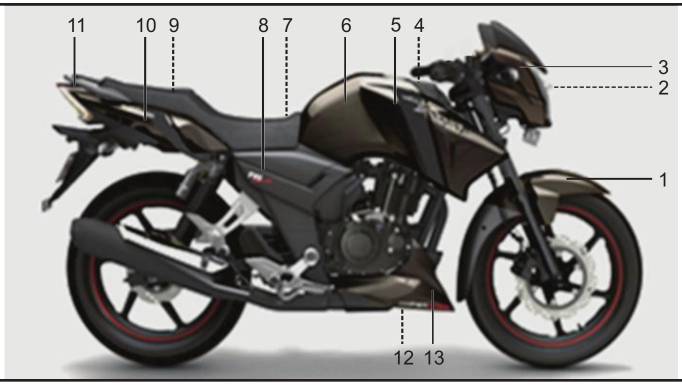

S.No.	PART NO	DESCRIPTION
1	N92201608DG	FENDER FRONT
2	N92228398D	HOUSING HEAD LAMP FRONT LH
3	N92228098D	HOUSING HEAD LAMP FRONT RH
4	N92228808DC	COVER FUEL TANK LH
5	N92229008DC	COVER FUEL TANK RH
6	N91411908DA	FUEL TANK COMP
7	N9222860	COVER FRAME LH
8	N9222870	COVER FRAME RH
9	N92222708DA	TAIL COVER LH
10	N92222808DA	TAIL COVER RH
11	N92222908DA	TAIL COVER CENTER
12	N92227508D	ENGINE GUARD L
13	N92227608DA	ENGINE GUARD R
14	N9226710	TAPESET T GREY

PEARL YELLOW (SINGLE TONE)

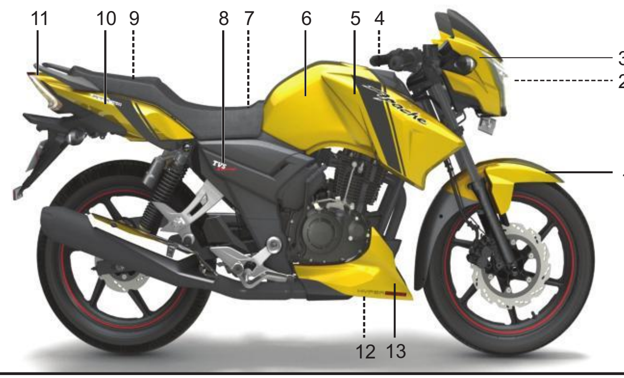

S.No.	PART NO	DESCRIPTION
1	N92201606RF	FENDER FRONT
2	N92228396R	HOUSING HEAD LAMP FRONT LH
3	N92228096R	HOUSING HEAD LAMP FRONT RH
4	N92228806RC	COVER FUEL TANK LH
5	N92229006RC	COVER FUEL TANK RH
6	N91411906RA	FUEL TANK COMP
7	N9222860	COVER FRAME LH
8	N9222870	COVER FRAME RH
9	N92222706RA	TAIL COVER LH
10	N92222806RA	TAIL COVER RH
11	N92222906RA	TAIL COVER CENTER
12	N92227506R	ENGINE GUARD L
13	N92227606RA	ENGINE GUARD R
14	N9226730	TAPESET PEARL YELLOW

‘-----’ LINE INDICATES LH SIDE

TVS APACHE RTR 160 REFRESH (SINGLE TONE) PAINTED PARTS

PEARL WHITE (SINGLE TONE)

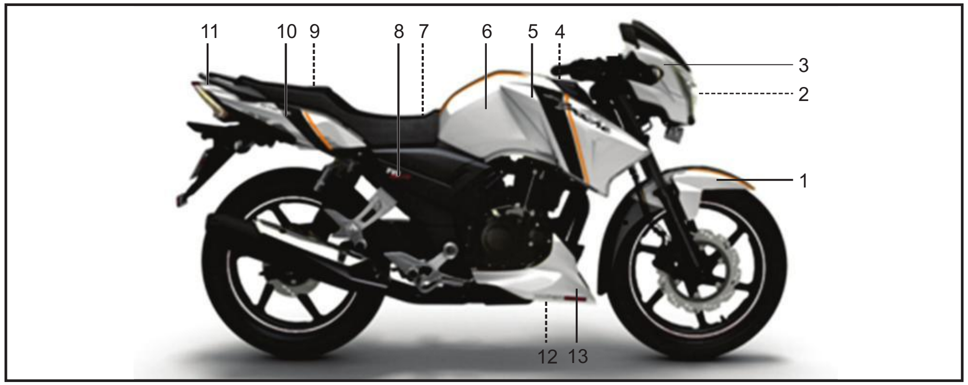

S.No.	PART NO	DESCRIPTION
1	N92201602FE	FENDER FRONT
2	N92228392F	HOUSING HEAD LAMP FRONT LH
3	N92228092F	HOUSING HEAD LAMP FRONT RH
4	N92228802FD	COVER FUEL TANK LH
5	N92229002FD	COVER FUEL TANK RH
6	N91411902FB	FUEL TANK COMP
7	N9222860	COVER FRAME LH
8	N9222870	COVER FRAME RH
9	N92222702FB	TAIL COVER LH
10	N92222802FB	TAIL COVER RH
11	N92222902FB	TAIL COVER CENTER
12	N92227502F	ENGINE GUARD L
13	N92227602FB	ENGINE GUARD R
14	N9226510	TAPESET PEARL WHITE

BLACK (SINGLE TONE)

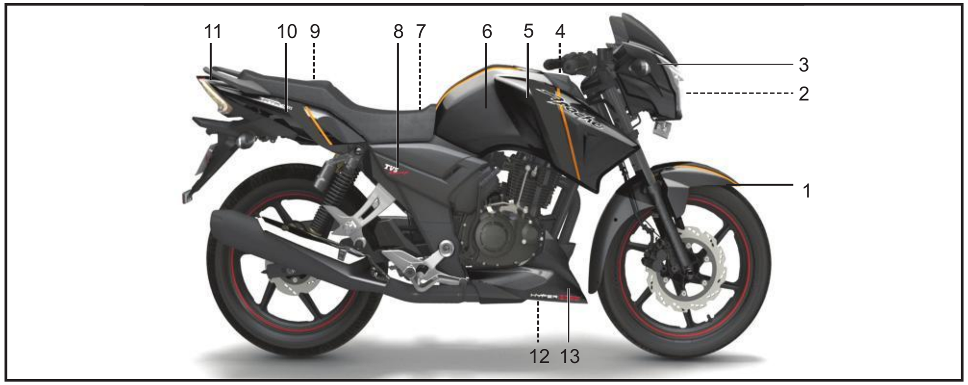

S.No.	PART NO	DESCRIPTION
1	N92201600DN	FENDER FRONT
2	N92228390D	HOUSING HEAD LAMP FRONT LH
3	N92228090D	HOUSING HEAD LAMP FRONT RH
4	N92228800DC	COVER FUEL TANK LH
5	N92229000DC	COVER FUEL TANK RH
6	N91411900DH	FUEL TANK COMP
7	N9222860	COVER FRAME LH
8	N9222870	COVER FRAME RH
9	N92222700DL	TAIL COVER LH
10	N92222800DL	TAIL COVER RH
11	N92222900DH	TAIL COVER CENTER
12	N92227500D	ENGINE GUARD L
13	N92227600DB	ENGINE GUARD R
14	N9226520	TAPESET BLACK

‘-----’ LINE INDICATES LH SIDE

TVS MOTOR CO.
GENUINE
PARTS

TVS MOTOR COMPANY TVS

International Business
PB No. 4 , Harita, Hosur – 635 109, Tamil Nadu, India
Phone : +91 4344 276780 – 84

REVISION 01 / JAN 2014

(REPRINT OF THIS CATALOGUE IN ANY FORM IS PROHIBITED)